CALDWELL

SOLUTIONS THAT SET NEW STANDARDS

TIMB-A-TILT GENERAL ARRANGEMENT

The details shown on this data sheet are of a typical general arrangement for a TIMB-A-TILT window. Dimensions A,B,C and W are the dimensions required on our order form in order to calculated the correct balance lengths and weights.

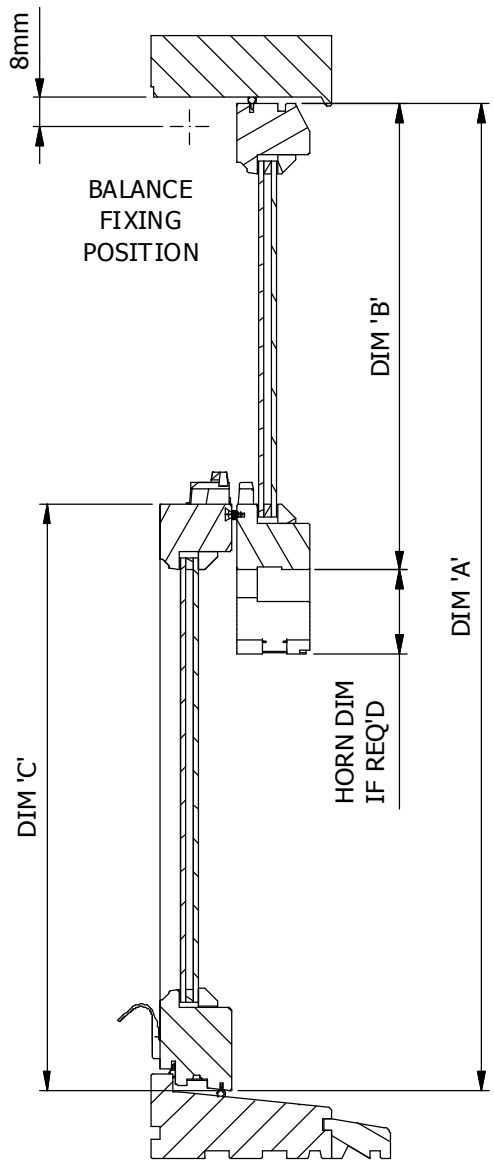

SECTION Y-Y

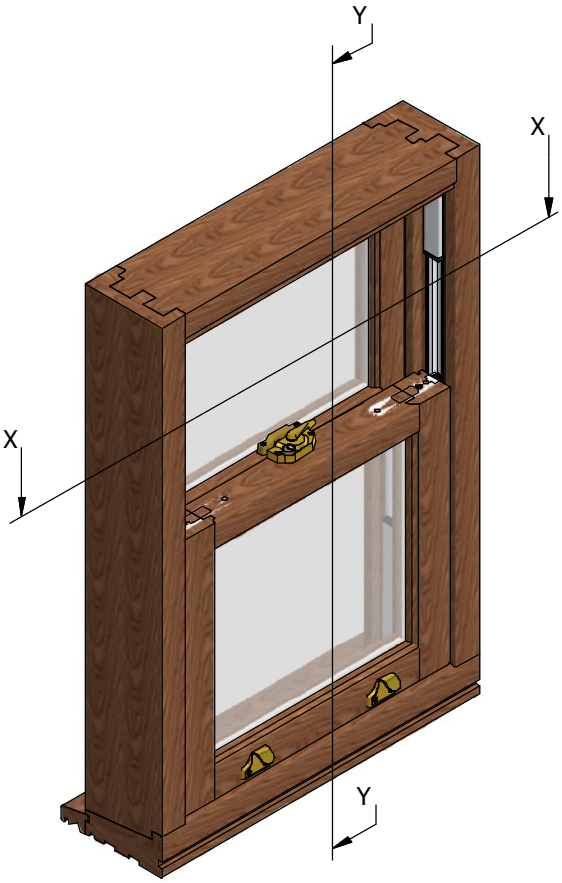

ISOMETRIC VIEW

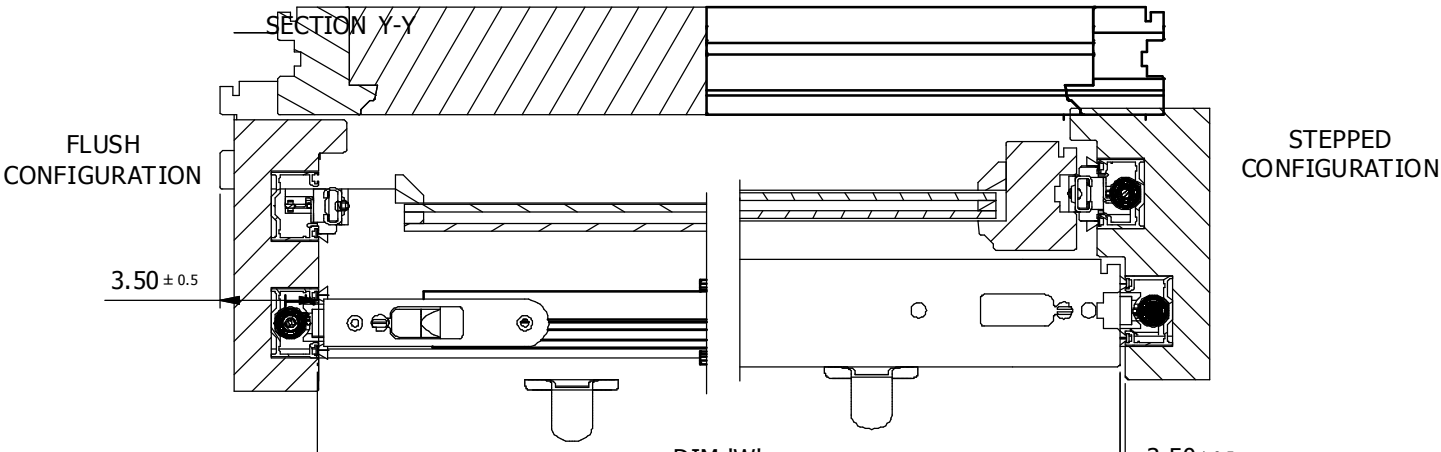

SECTION X-X

All of the information shown on this data sheet was correct at the time of issue. All information however is subject to change and therefore it is advisable to check with Caldwell Hardware to ensure that you have the latest issue level.

CALDWELL

SOLUTIONS THAT SET NEW STANDARDS

BASIC KIT COMPONENTS

BALANCES
(TWO PAIRS PER WINDOW)

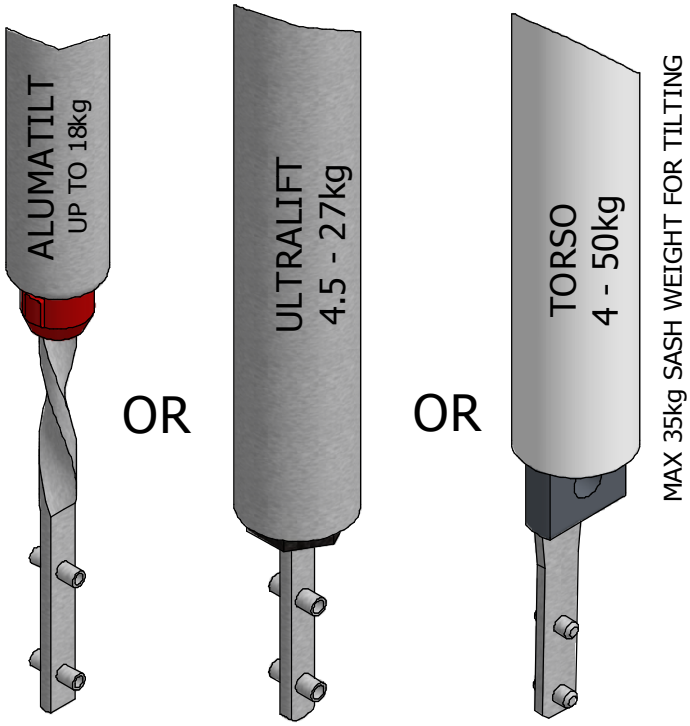

Ø14
AVAILABLE IN: ALUMINIUM, BROWN OR WHITE TUBES

Ø17
AVAILABLE IN: BROWN, WHITE OR GREY TUBES

Ø19
Ø17mm up to 25kg. AVAILABLE IN: BROWN, WHITE OR GREY TUBES

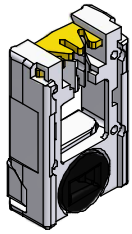

16H70
PIVOT SHOE ALUMATILT (FOUR PER WINDOW)

OR

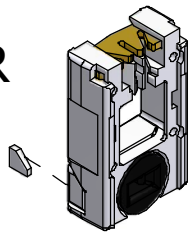

UK132
PIVOT SHOE (WITH TUFNOL INSERTS) ULTALIFT/TORSO (FOUR PER WINDOW)

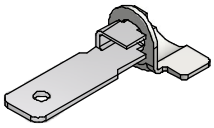

UK216
SHACKLE (USE WITH UK166, SEE PAGE 18)

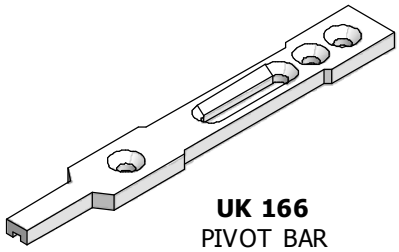

UK 166
PIVOT BAR (FOUR PER WINDOW OR TWO PER WINDOW WHEN HORNS ARE REQUIRED)

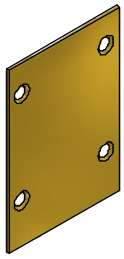

UK286
HORN PIVOT BAR FIXING PLATE (USE WITH UK377)

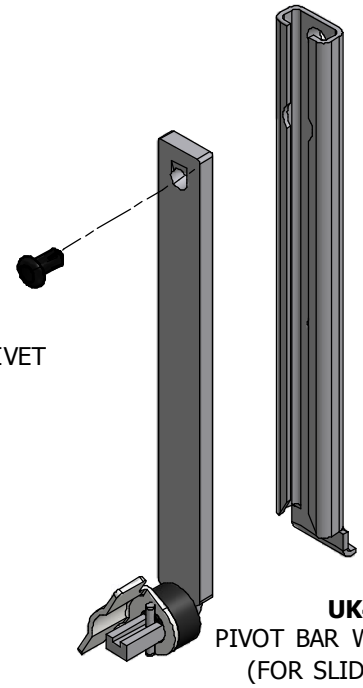

UK449
PIVOT BAR CARRIER (FOR SLIDE IN PIVOT BARS)

UK469
PUSH IN RIVET

UK446
PIVOT BAR WITH SHACKLE (FOR SLIDE IN PIVOT BARS)

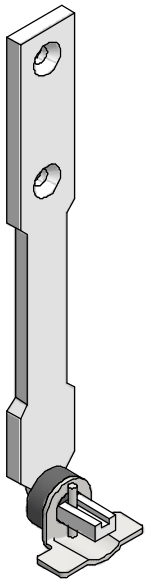

UK377
HORN PIVOT BAR WITH SHACKLE (TWO PER WHEN HORNS REQUIRED)

All of the information shown on this data sheet was correct at the time of issue. All information however is subject to change and therefore it is advisable to check with Caldwell Hardware to ensure that you have the latest issue level.

CALDWELL

SOLUTIONS THAT SET NEW STANDARDS

BASIC KIT COMPONENTS

UK499
Operating Button
TOP SASH
(2 PER WINDOW)
AVAILABLE IN: SILVER ANODISED

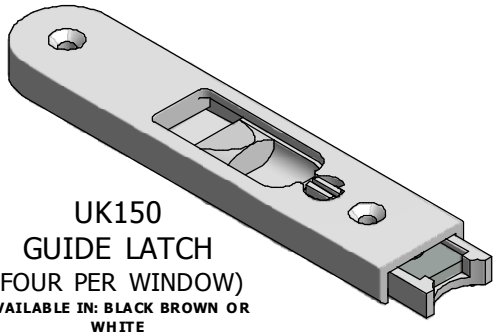

UK150
GUIDE LATCH
(FOUR PER WINDOW)
AVAILABLE IN: BLACK BROWN OR WHITE

OR

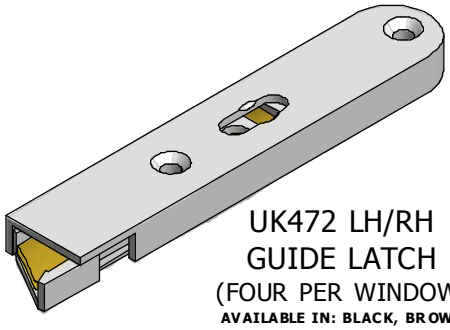

UK472 LH/RH
GUIDE LATCH
(FOUR PER WINDOW)
AVAILABLE IN: BLACK, BROWN OR WHITE

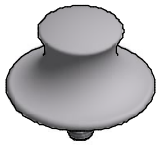

UK545
Operating Button
LOWER SASH
(2 PER WINDOW)
AVAILABLE IN: GOLD, WHITE, CHROME OR BRUSHED STEEL FINISHES

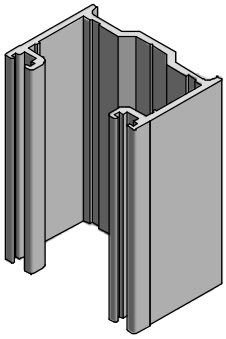

MK3
JAMBLINER
(With Weatherstrip Grooves)
(FOUR PER WINDOW)
AVAILABLE IN: WHITE, BLACK OR BROWN

OR

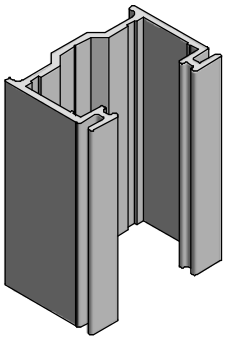

MK4
JAMBLINER
(No Weatherstrip Grooves)
(FOUR PER WINDOW)
AVAILABLE IN: WHITE , BLACK OR BROWN

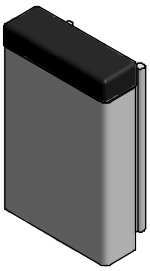

TT220STOP
LOWER TRAVEL STOP
220mm LONG
(TWO PER WINDOW)
AVAILABLE IN: WHITE OR BROWN WITH BLACK OR WHITE BUNGS

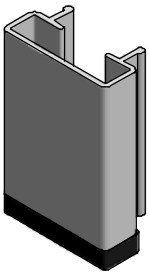

UK233
UPPER TRAVEL STOP
130mm LONG
(TWO PER WINDOW)
AVAILABLE IN: WHITE OR BROWN WITH BLACK OR WHITE BUNGS

N.B LOWER TRAVEL STOPS FOR WINDOWS WITH UNEQUAL HEIGHT SASHES ARE CUT TO LENGTH ROUNDED UP TO THE NEAREST 100mm. SEE PAGE 20,

All of the information shown on this data sheet was correct at the time of issue. All information however is subject to change and therefore it is advisable to check with Caldwell Hardware to ensure that you have the latest issue level.

CALDWELL

SOLUTIONS THAT SET NEW STANDARDS

ACCESSORIES

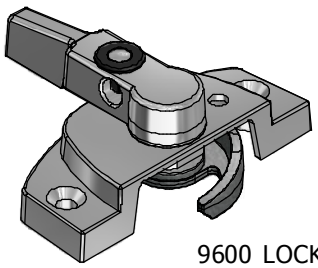

9600 LOCKING
9114 KEY SOLD SEPERATELY
9400 NON-LOCKING
AVAILABLE IN:BLACK, BRONZE, GOLD, CHROME, WHITE

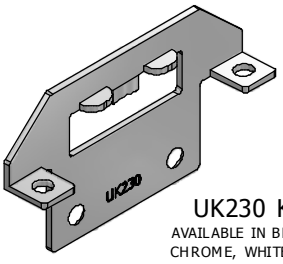

UK230 KEEPER
AVAILABLE IN BRONZE, GOLD, CHROME, WHITE OR BRUSHED STAINLESS

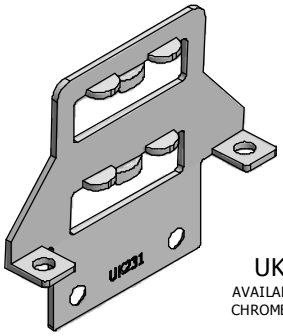

UK231 KEEPER
AVAILABLE IN BRONZE, GOLD, CHROME, WHITE OR BRUSHED STAINLESS

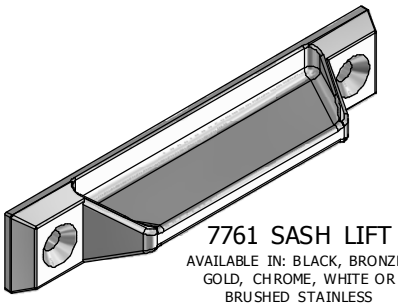

7761 SASH LIFT
AVAILABLE IN: BLACK, BRONZE, GOLD, CHROME, WHITE OR BRUSHED STAINLESS

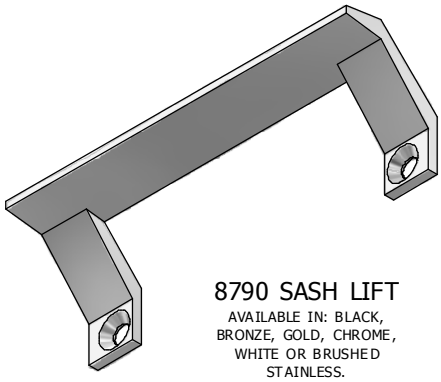

8790 SASH LIFT
AVAILABLE IN: BLACK, BRONZE, GOLD, CHROME, WHITE OR BRUSHED STAINLESS.

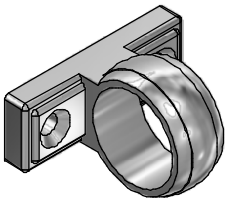

UK624 SASH RING
AVAILABLE IN: BRONZE, GOLD, CHROME, WHITE OR BRUSHED STAINLESS.

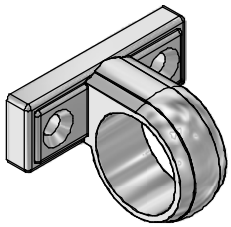

UK745 SASH RING
AVAILABLE IN: BRONZE, GOLD, CHROME, WHITE OR BRUSHED STAINLESS.

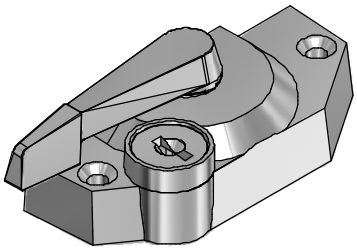

KL800 SASH LOCK
AVAILABLE IN: BRONZE, GOLD, CHROME, WHITE OR BRUSHED STAINLESS.

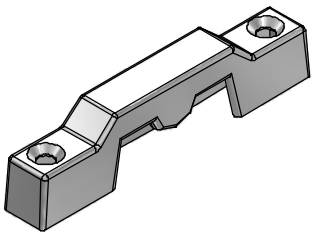

30459 KEEP
AVAILABLE IN: BRONZE, GOLD, CHROME, WHITE OR BRUSHED STAINLESS.

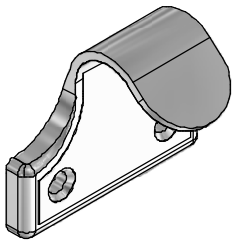

UK616 SASH LIFT
AVAILABLE IN: BRONZE, GOLD, CHROME, WHITE OR BRUSHED STAINLESS.

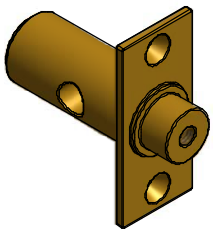

PE370KIT ARCH HEAD RACK BOLT KIT
WITH KEY AND BUFFER (SEE PAGE 25 OF THIS MANUAL)

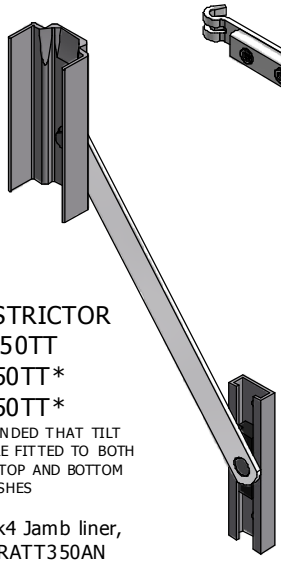

TILT RESTRICTOR
RA150TT
RA250TT*
RA350TT*
IT IS RECOMMENDED THAT TILT RESTRICTORS ARE FITTED TO BOTH SIDES OF THE TOP AND BOTTOM SASHES

* If using Mk4 Jamb liner, RA250AN, RATT350AN are advised.

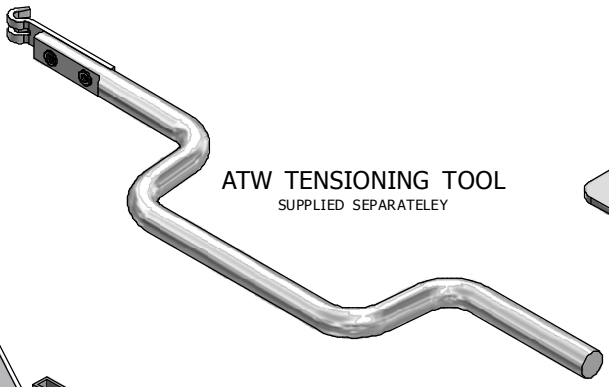

ATW TENSIONING TOOL
SUPPLIED SEPARATELEY

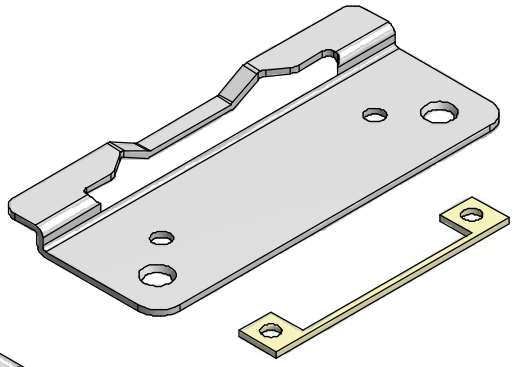

UK466 SECURITY PLATE
AVAILABLE IN WHITE

Please see DATASHEET 00457 for weather sealing accessories

For availability of products in alternative colours and finishes, consult Caldwell Customer Services Department

All of the information shown on this data sheet was correct at the time of issue. All information however is subject to change and therefore it is advisable to check with Caldwell Hardware to ensure that you have the latest issue level.

CALDWELL

SOLUTIONS THAT SET NEW STANDARDS

Telephone 024 7643 7900

Guide To Travel Stops

Travel stops are essential whenever spring balances are in use. Travel stops ensure that the spring balances do not become damaged or prematurely worn. Travel stops are required at both the top of the window & at the bottom.

Travel stops are available from most of the major window system companies and these are usually profile specifiic. Caldwell also offer a range of travel stops.

The principal failure mode on spring balances where travel stops are not fitted are over extension & under extension. Both of these failure modes result in the balances being damaged beyond repair and will almost certainly mean that the balances will have to be replaced.

Over extension occurs when the upper sash is pulled downwards beyond the working range of the balance, this can result in internal damage within the spring balance. Travel stops prevent this from happening by limiting the travel of the sash.

Under extension occurs if the lower sash is lifted up until it hits the bottom of the balances, again this can result in internal damage within the spring balance. Travel stops prevent this by limiting the travel of the sash.

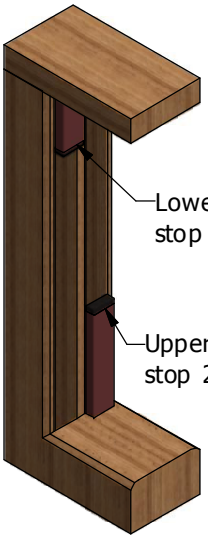

DO NOT OPERATE THE WINDOW UNTIL THE UPPER AND LOWER TRAVEL STOPS ARE FITTED.

Travel stop lengths

Caldwell recommend the minimum size of travel stops to be fitted to an equally split vertical slider are:

Upper sash travel stop = 220mm
Lower sash travel stop = 130mm

The above sizes should always be used with Caldwell spring balances, however longer stops can be used if required.

For every 25mm that the upper sash is smaller than equally split, 50mm must be added to the upper sash travel stop length.

If horns are used, reduce the calculated length of the travel stop by the length of the horn.

For further information, please contact Caldwell Technical Department.

CONVENTIONAL TIMBER SYSTEM TRAVEL STOPS

On a conventional timber system, a UK190N-Upper Sash Travel Stop and a UK191N-lower Sash Travel Stop can be used (see datasheet 00333). NOTE: If the UK190N & UK191N are used, they need to be positioned correctly to limit travel adequately (method shown below). Alternatively, a block of timber cut to length can be used. All stops should be fitted as described below.

Carefully lift the lower sash until resistance is felt i.e. the balance is fully retracted. Pencil mark one jamb in line with the top of the sash.

Fix a limit stop with its bottom edge 13mm below the mark. Raise the sash to the limit block and fix a second block to the opposite jamb.

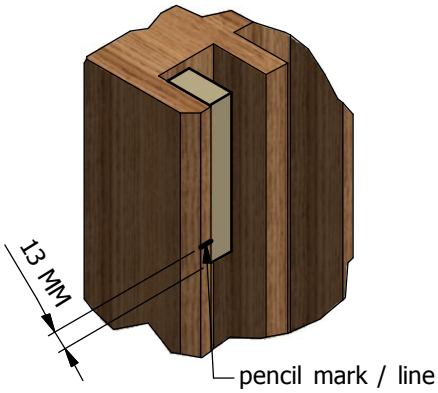

Carefully lower the upper sash until resistance is felt i.e. the balance is fully extended. Pencil mark one jamb in line with the bottom of the meeting rail.

Fix a limit stop with its bottom edge 13mm above the mark. Lower the sash to the limit block and fix a second block to the opposite jamb.

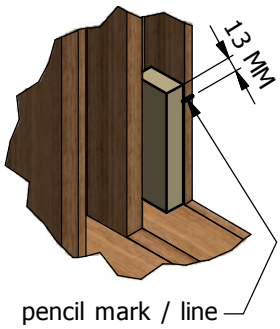

All of the information shown on this data sheet was correct at the time of issue. All information however is subject to change and therefore it is advisable to check with Caldwell Hardware to ensure that you have the latest issue level.

CALDWELL

SOLUTIONS THAT SET NEW STANDARDS

Telephone 024 7643 7900

WEATHERSEAL ACCESSORIES

Brush Pile

A high quality brush pile with a central weather fin manufactured from polypropylene giving low friction properties and offering additional weather performance and sealing characteristics. The pile can either be used in the following three ways:-

1) Fitted directly to grooves in pvc or aluminum profiles,
2) fitted to the timb-a-tilt jamb liner (timb-a-tilt only) or
3) fitted to the brush pile holder as detailed below (for both conventional or timb-a-tilt windows).

Pile base width: 4.8mm
Pile height: 7mm
Caldwell Part No: UK687

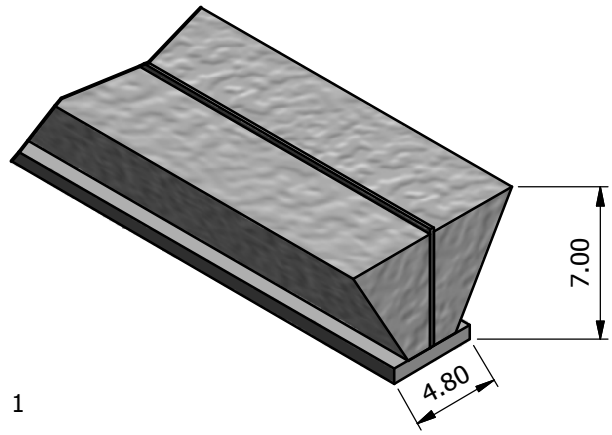

Fig 1

Brush Pile Holder

A brush pile holder suitable for brush piles with a 4.8mm base width. The holder is manufactured from rigid pvc and is available in both white or brown and simply pushes into a 'T' slot when machined in timber profiles (see fig 2).

Caldwell Part No. UK688

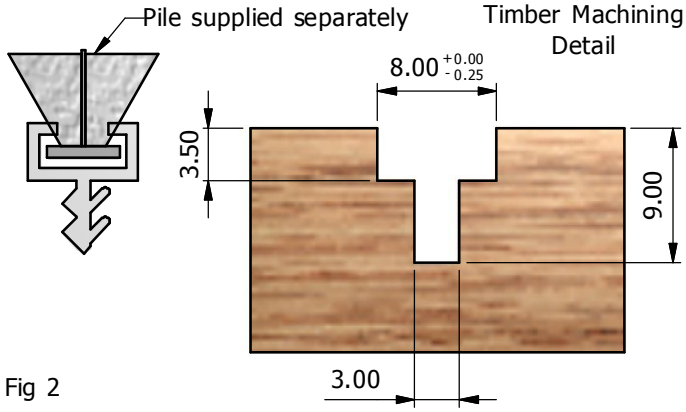

Fig 2

Bubble Seal

A 7mm diameter rubber bubble seal for horizontal sealing of top & bottom sashes on vertical sliding windows. Seal simply pushes into a 3mm x 5mm groove when machined in timber profiles (see fig 3).

Caldwell Part No. UK689

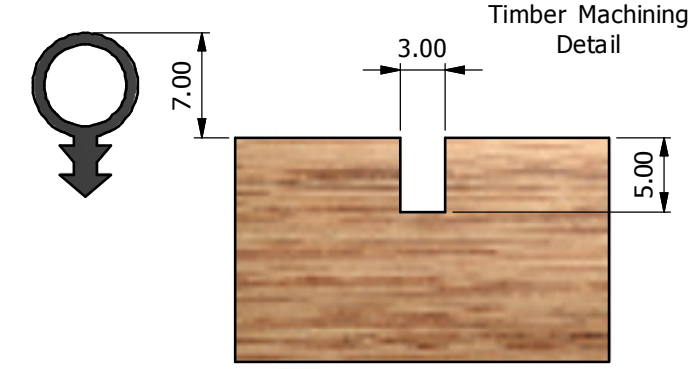

Fig 3

All of the information shown on this data sheet was correct at the time of issue. All information however is subject to change and therefore it is advisable to check with Caldwell Hardware to ensure that you have the latest issue level.

CALDWELL

SOLUTIONS THAT SET NEW STANDARDS

Telephone 024 7643 7900

POSITIONS FOR BS7950 HARDWARE ON TIMBER WINDOWS

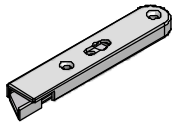

Security tilt latch- PE615
With stainless steel reinforcement plate providing extra strength in the top corners of the bottom sash.

Security block PE66612
For use on the top rail of the top sash. Ensures that there is still engagement in the head of the window if the top sash is jemmied downward.

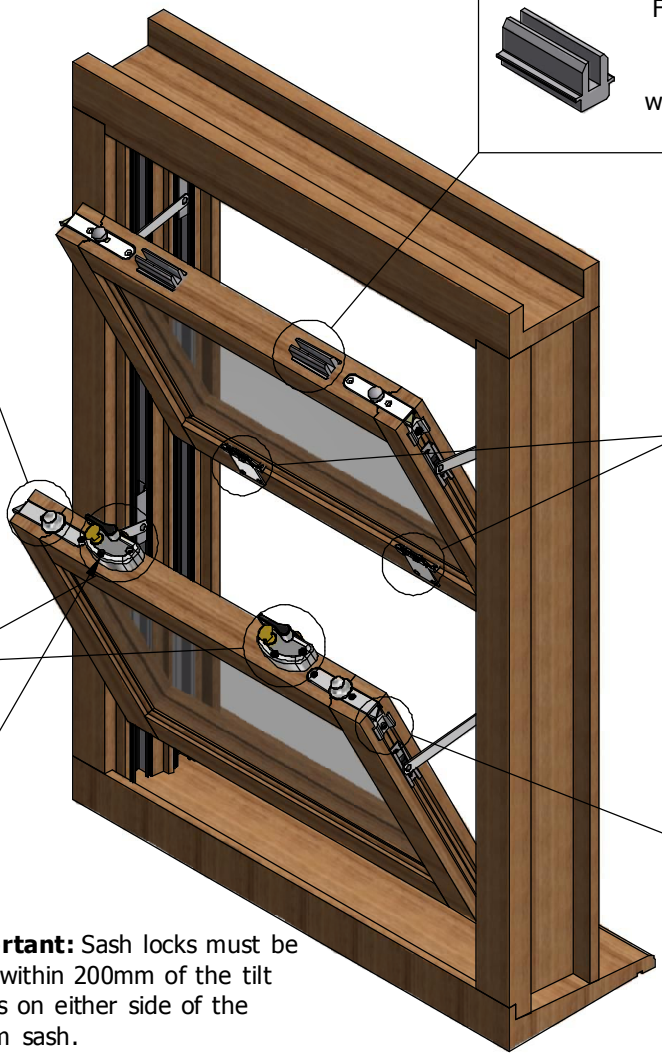

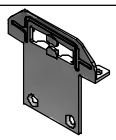

Security sash lock keep UK715
Made from stainless steel, the security keep has formed strengthening ribs & has two tangs which the cam of the security keep secures around.

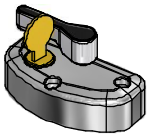

Security sash locks PE7950
With a unique patent pending design (App No 0505041.4), the 2 security sash locks, along with the 2 security keeps, ensures that the sashes remain locked together when under attack.

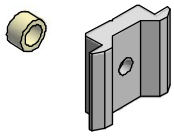

Sash spacer & 'O'-ring KP1009
The spacer takes any free play that exists between the sides of the sash & the jamb thus preventing the tilt latches from becoming disengaged if the sash is jemmied to the side.

Important: Sash locks must be fitted within 200mm of the tilt latches on either side of the bottom sash.

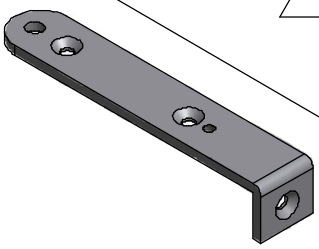

Tilt latch fixing plate
Fixing plate will help the tilt latch to stay firmly in position by reinforcing the fixings.
Note: The fixing plate is not available from Caldwell, the one shown is a typical example. The exact design must be determined by the window manufacturer.

Tilt latch and Sash lock reinforcement
This is required to help the Tilt Latch and Sash Lock stay firmly in position by reinforcing the fixings.
Note: This part is not available from Caldwell, the one shown is a typical example. The exact design must be determined by the window manufacturer.

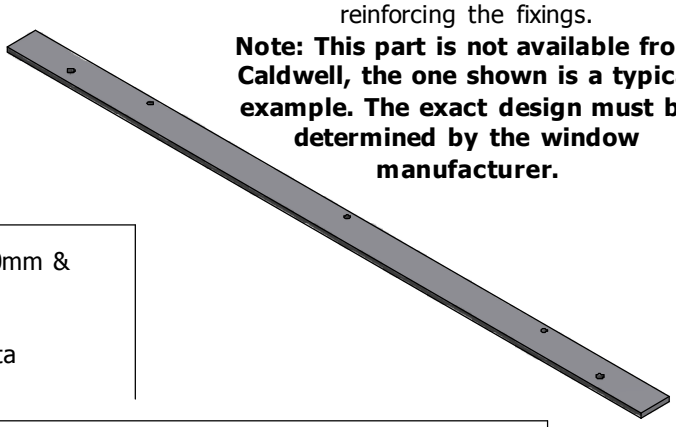

Important: Gap between sash & frame must measure between 3.0mm & 3.5mm on each side.

Please refer to data sheet 00454 for specific part numbers also data sheet 00516 for more detailed fixing details.

All of the information shown on this data sheet was correct at the time of issue. All information however is subject to change and therefore it is advisable to check with Caldwell Hardware to ensure that you have the latest issue level.

DATASHT REF. 00515 ISSUE LEVEL 03

CALDWELL

SOLUTIONS THAT SET NEW STANDARDS

Telephone 024 7643 7900

BRASS ACCESSORIES

Other brass accessories are also available. Please contact Caldwell to discuss any requirements.

HOOK SASH LIFT
UK807

5" 'D' SASH HANDLE
UK808

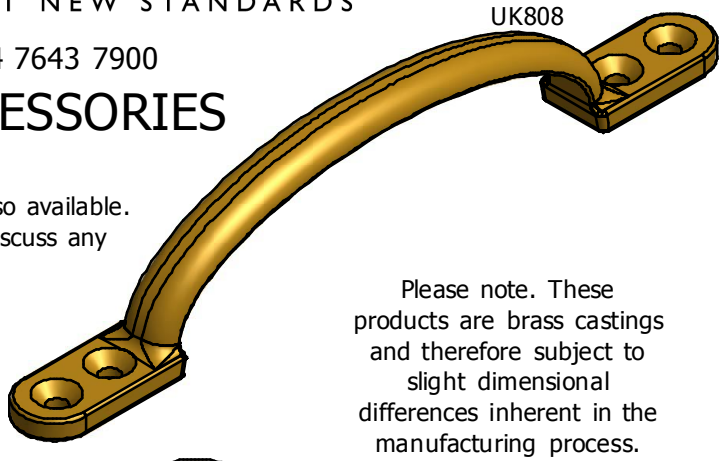

Please note. These products are brass castings and therefore subject to slight dimensional differences inherent in the manufacturing process.

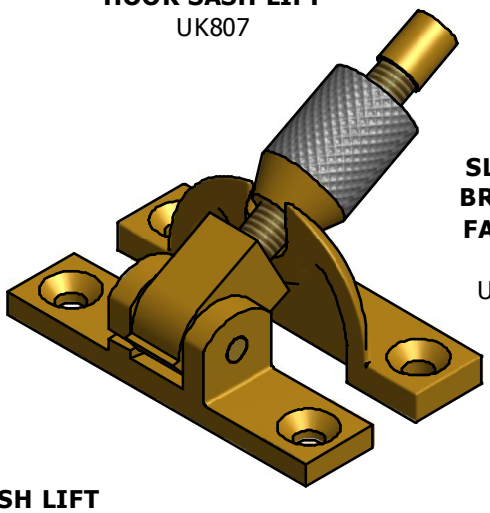

SLIMLINE BRIGHTON FASTENER
UK685
UK690CH

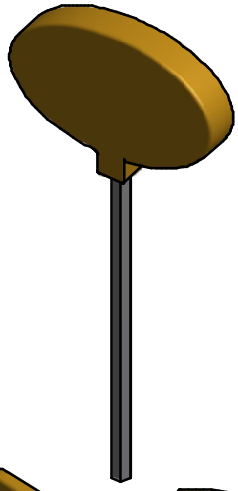

PART NUMBER SUFFIXES FOR FINISHES

LB = Lacquered Brass Suffix
CH = Chrome Suffix
BN = Brushed Nickel Suffix

RING SASH LIFT
UK806

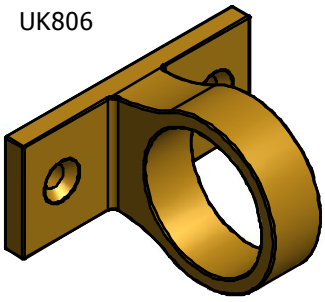

FITCH FASTENER & KEEP
UK801 Non Locking
UK802 Locking

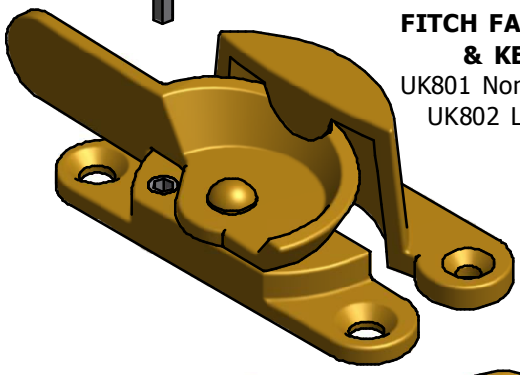

WEEKES CATCH
UK810

POLE HOOK
UK809

BALL CLAW CATCH & KEEP
UK803 Non Locking
UK804 Locking

Caldwell's range of brass hardware is supplied in a lacquered finish. If this is to be used externally then it should be waxed weekly to protect the lacquered finish. Over time, and subject to the environment it operates within plus the type of use it undergoes, the lacquer coating will be eroded. When the lacquer coating is no longer present then the brass surface will need to be maintained with a propriety brass cleaner on a regular basis to maintain appearance and prevent visible corrosion.

All of the information shown on this data sheet was correct at the time of issue. All information however is subject to change and therefore it is advisable to check with Caldwell Hardware to ensure that you have the latest issue level.

DATASHT REF. DATASHT-00117 ISSUE LEVEL 15

CALDWELL

SOLUTIONS THAT SET NEW STANDARDS

Telephone 024 7643 7900

Tilt latch Concealment Plates

Typical Assembly Example

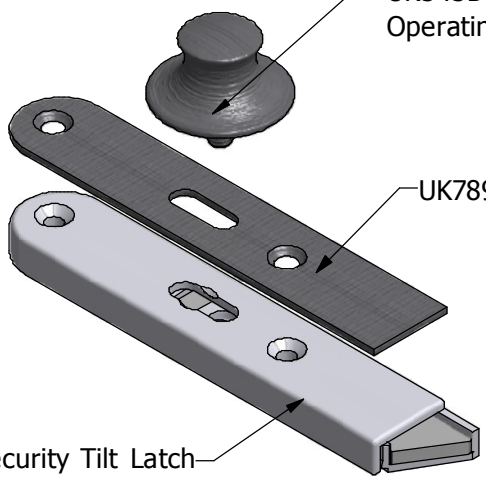

Dimensional References

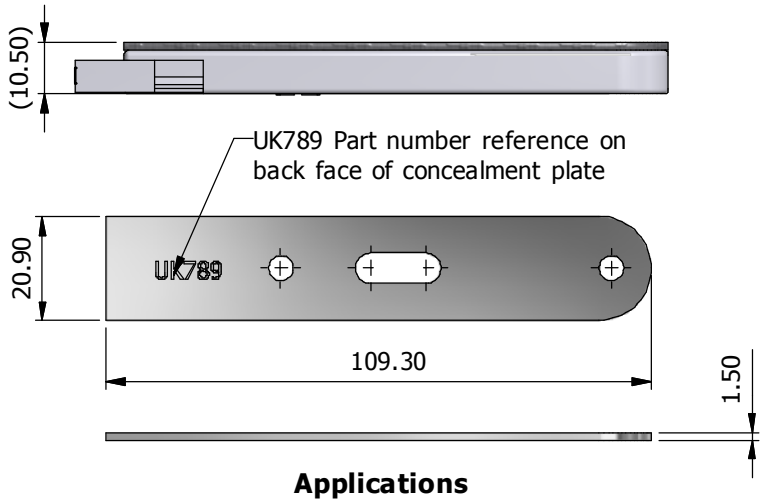

Applications

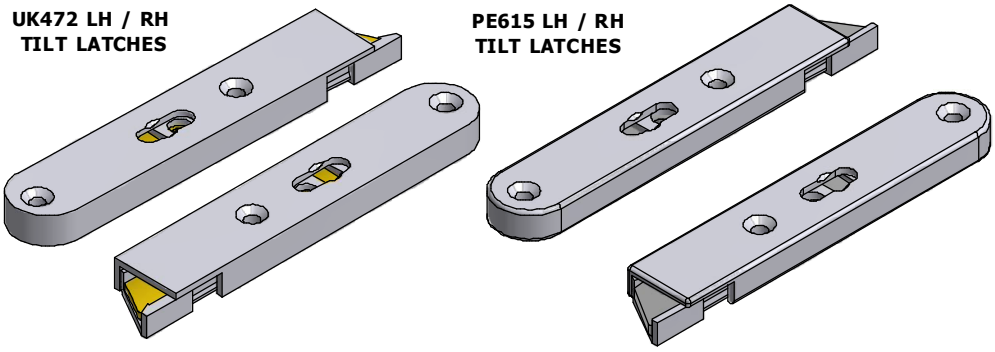

Designed to fit UK472 LH & RH Tilt Latches and PE615 LH & RH Security Tilt Latches

Painted Finish Options

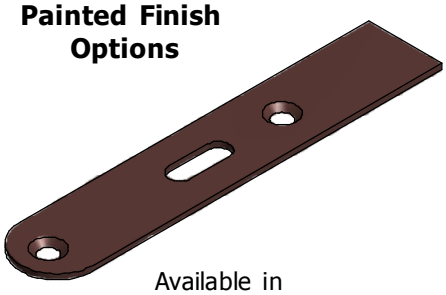

Available in
UK789B - Brown Powder Coat Finish

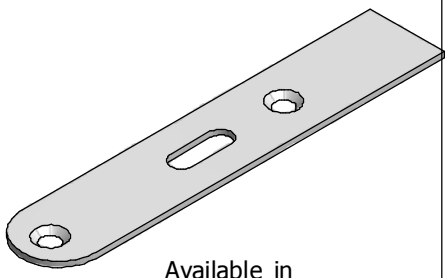

Available in
UK789HIPCAWHITE - White Powder Coat Finish

Plated Finish Options

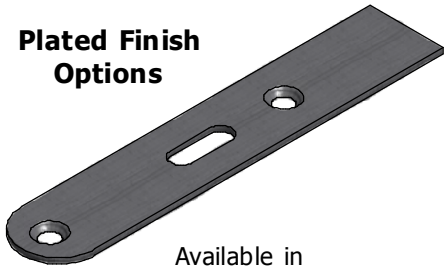

Available in
UK789BS - Brushed Stainless Finish

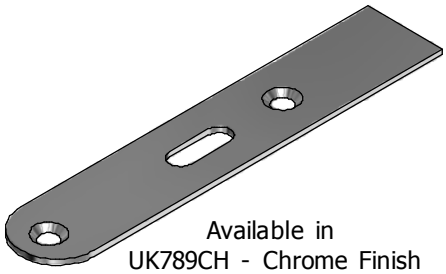

Available in
UK789CH - Chrome Finish

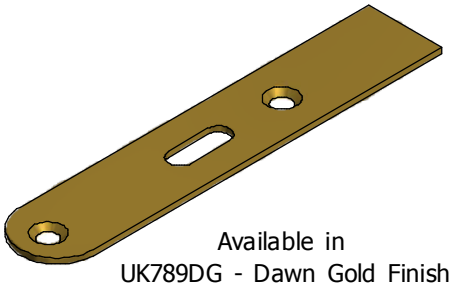

Available in
UK789DG - Dawn Gold Finish

All of the information shown on this data sheet was correct at the time of issue. All information however is subject to change and therefore it is advisable to check with Caldwell Hardware to ensure that you have the latest issue level.

CALDWELL

SOLUTIONS THAT SET NEW STANDARDS

DESIGN HINTS

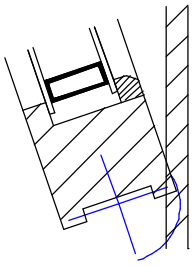

When designing your timber profiles, the following must be taken into consideration.

Arc interference occurs during tilt of a sash, when the bottom rail rubs against either the rebate in a jamb or in some circumstances, the inside face of the outer sash, as shown.

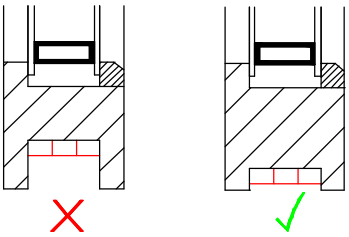

This can be eliminated by:

1. Ensuring the pivot bar is set low in the bottom rail.

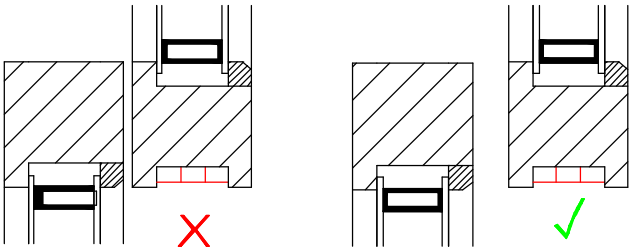

2. Ensuring adequate clearance is maintained between the jamb rebate and between sashs.

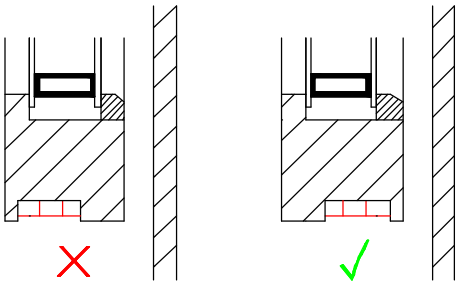

3. Setting the pivot bars close to the member on which it would interfere.

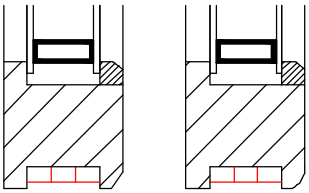

If, in the event, arc interference still occurs, then the corner of the affecting rail should be chamfered.

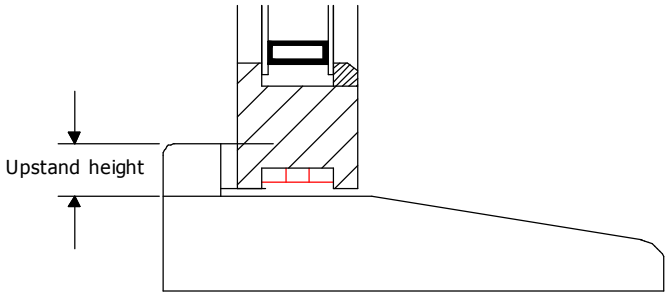

It is recommended to have an upstand of at least 25mm to make the window less susceptible to failure if wet weather tested. Water will build up and spill over this area if it is too low.

The weatherseal of the windows is the responsibility of the window manufacturer. We do however recommend a brush pile 4.8mm base x 7mm high for use with the MK3 jamb liner. Bear in mind that some seals that improve weather tightness, may also increase the friction of the moving sashes.

All of the information shown on this data sheet was correct at the time of issue. All information however is subject to change and therefore it is advisable to check with Caldwell Hardware to ensure that you have the latest issue level.

CALDWELL
SOLUTIONS THAT SET NEW STANDARDS

SASH / JAMB PREPS

JAMB PREPARATION FOR MK3 & MK4 JAMB LINERS

The diagram shows the recommended machining details for the timber jambs.

FLUSH CONFIGURATION

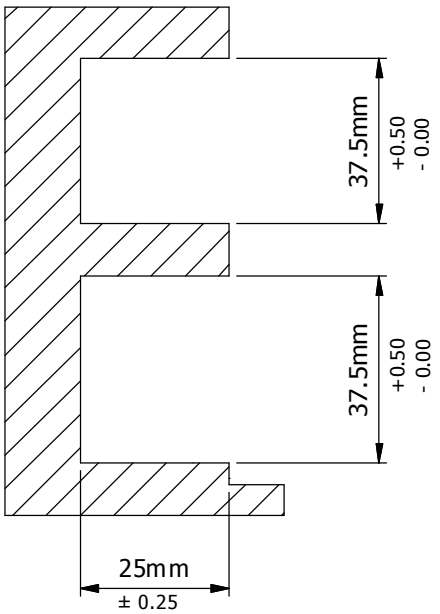

STEPPED CONFIGURATION

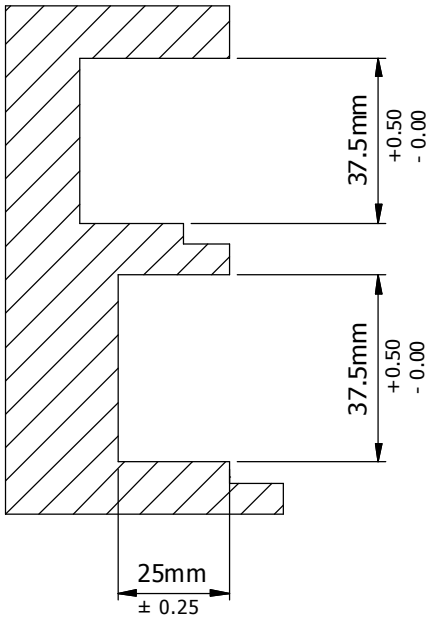

PREPARATION OF THE BOTTOM SASH RAILS FOR UK166 PIVOT BARS

The diagram shows the recommended machining detail to accept the UK166 pivot bar. This detail should be repeated at both ends of the bottom rail on each sliding sash when a UK166 pivot bar is required.
If upper sash has horns, refer to page 11.

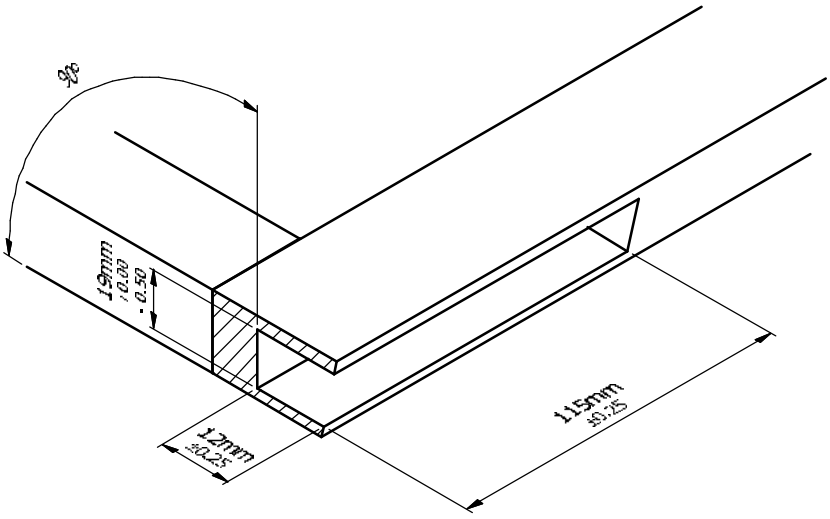

All of the information shown on this data sheet was correct at the time of issue. All information however is subject to change and therefore it is advisable to check with Caldwell Hardware to ensure that you have the latest issue level.

CALDWELL

SOLUTIONS THAT SET NEW STANDARDS

SASH / JAMB PREPS

PREPARATION OF THE JAMB RAIL FOR UK377 HORN PIVOT BAR

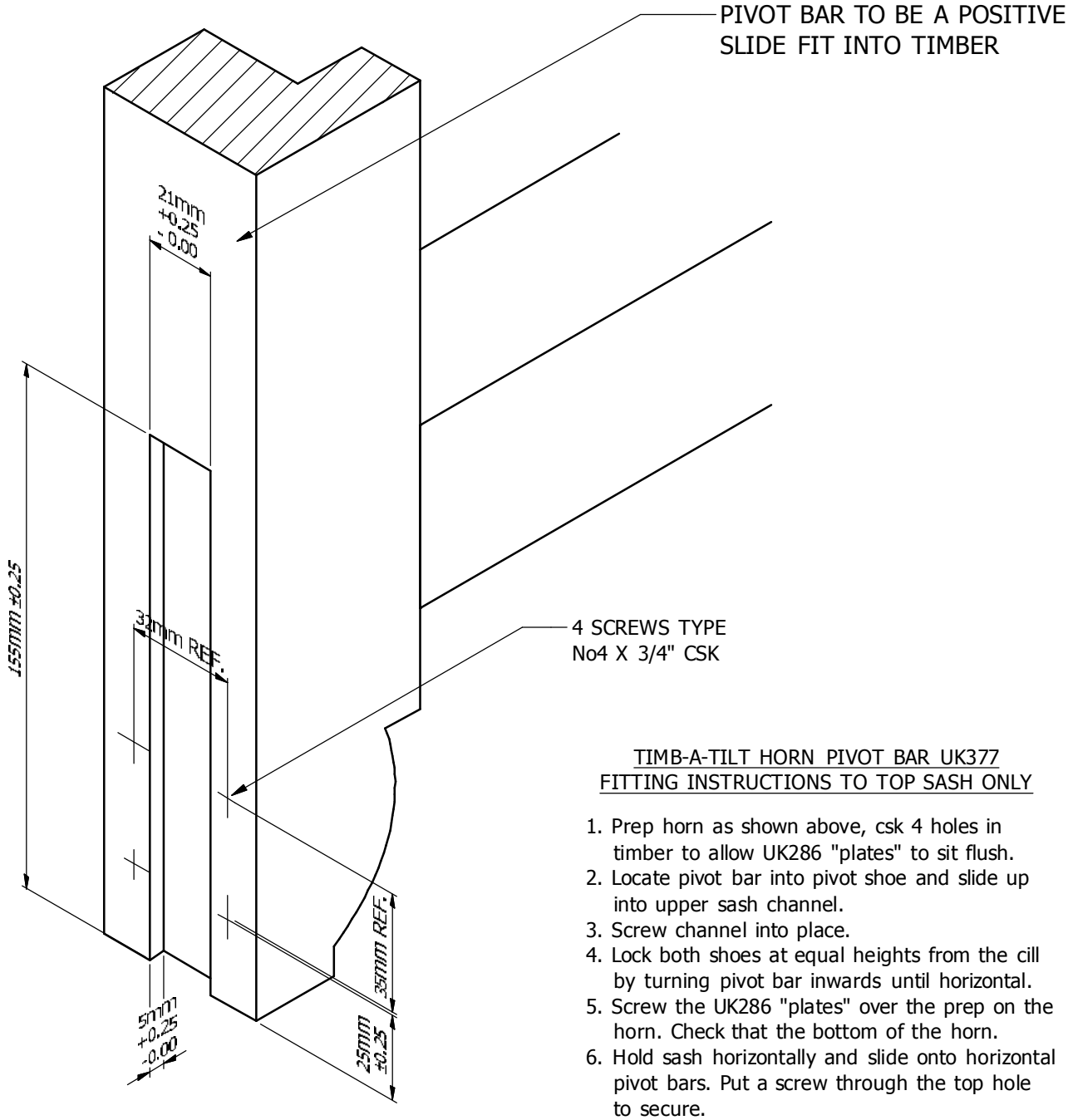

TIMB-A-TILT HORN PIVOT BAR UK377
FITTING INSTRUCTIONS TO TOP SASH ONLY

1. Prep horn as shown above, csk 4 holes in timber to allow UK286 "plates" to sit flush.
2. Locate pivot bar into pivot shoe and slide up into upper sash channel.
3. Screw channel into place.
4. Lock both shoes at equal heights from the cill by turning pivot bar inwards until horizontal.
5. Screw the UK286 "plates" over the prep on the horn. Check that the bottom of the horn.
6. Hold sash horizontally and slide onto horizontal pivot bars. Put a screw through the top hole to secure.
7. Tilt sash into vertical position, fix limit stops before operating the sash.

All of the information shown on this data sheet was correct at the time of issue. All information however is subject to change and therefore it is advisable to check with Caldwell Hardware to ensure that you have the latest issue level.

CALDWELL
SOLUTIONS THAT SET NEW STANDARDS

SASH PREP - SLIDE OFF PIVOT BARS

SASH PREPARATION FOR UK449 PIVOT BAR CARRIER

The diagram shows the recommended machining details for the timber sash jambs.

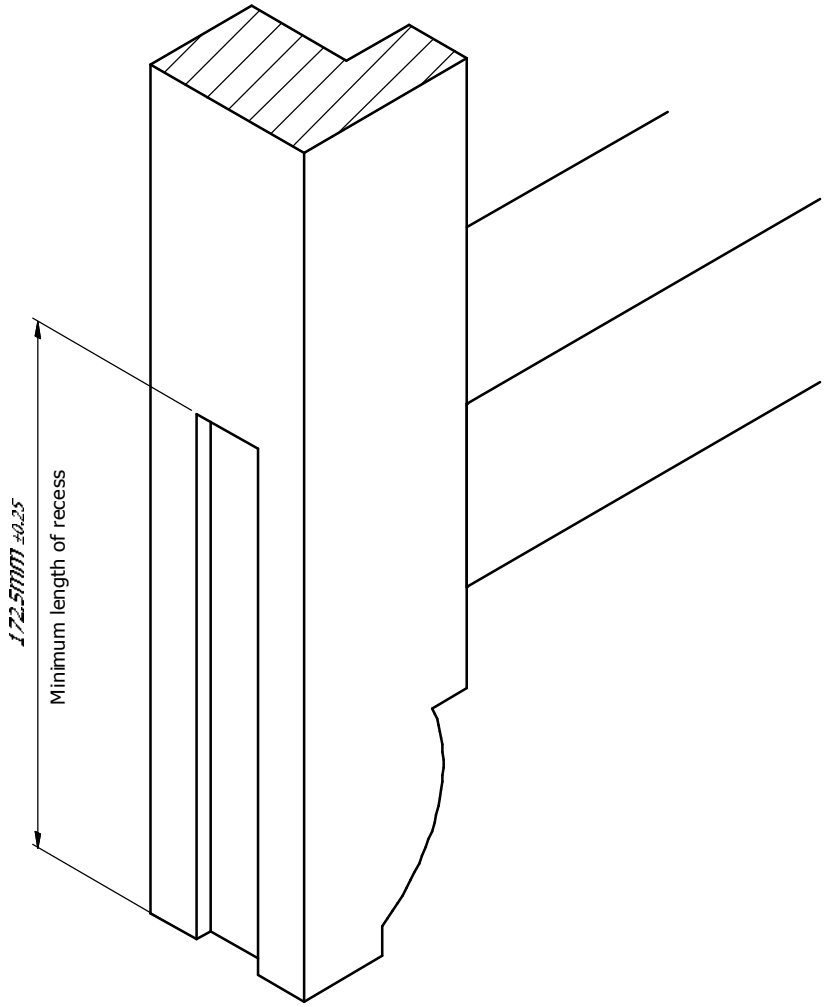

Jamb shown for reference

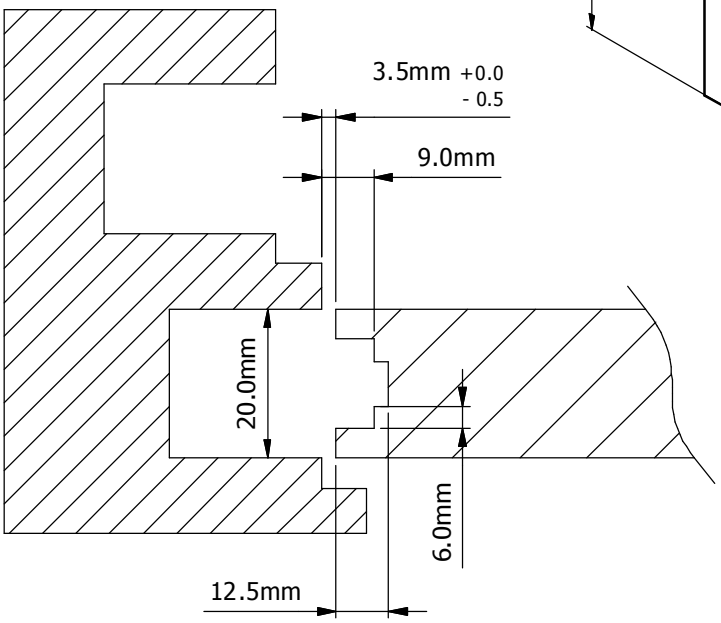

Centre of rebate in sash to be central
with rebate for jamb liners.

All of the information shown on this data sheet was correct at the time of issue. All information however is subject to change and therefore it is advisable to check with Caldwell Hardware to ensure that you have the latest issue level.

CALDWELL
SOLUTIONS THAT SET NEW STANDARDS

SASH / JAMB PREPS

PREPARATION OF THE SASH TOP RAILS FOR UK150 GUIDE LATCHES

The diagram shows the recommended machining detail to accept the guide latch.

This detail should be repeated at both ends of the top rail on each sliding sash.

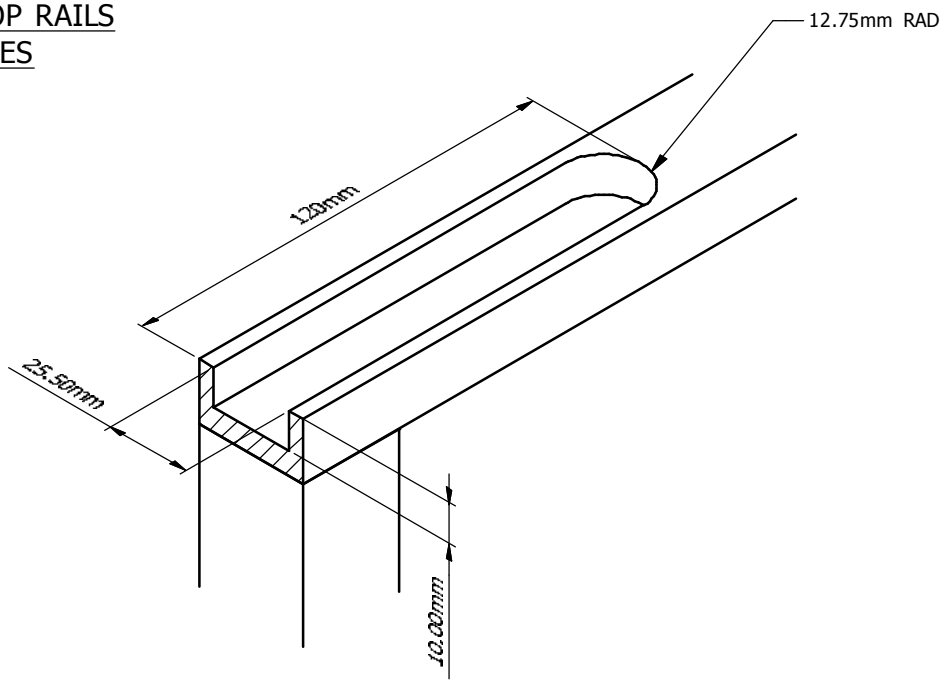

PREPARATION OF THE SASH TOP RAILS FOR UK472 GUIDE LATCHES

The diagram shows the recommended machining detail to accept the guide latch.

This detail should be repeated at both ends of the top rail on each sliding sash.

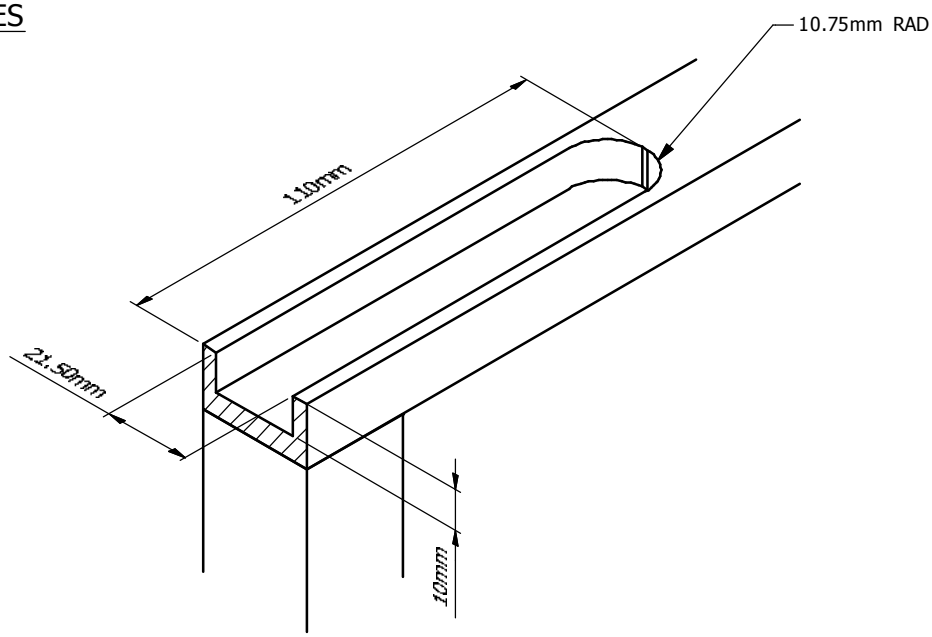

Tolerances on all dimensions to be ± 0.25 unless otherwise stated

All of the information shown on this data sheet was correct at the time of issue. All information however is subject to change and therefore it is advisable to check with Caldwell Hardware to ensure that you have the latest issue level.

CALDWELL

SOLUTIONS THAT SET NEW STANDARDS

JAMB LINERS

FIXING OF THE ALUMINIUM JAMB LINER ASSEMBLIES MK3 AND MK4 LINERS

Square cut the jamb liner to the inside jamb height (sash run) less 2.5mm.
Alternatively the jamb liners can be cut to the slope of the cill. In either case provision for adequate water drainage from the liners should be made.

For best results use a power saw fitted with a suitable blade for cutting aluminium.

Drill the fixing hole for the sash balances 8mm from the top of the liners to suit a No10 screw. Drill a fixing hole for the jamb liner 15mm from the bottom to suit a No8 screw. Intermediate fixing holes to be at 500mm centres maximum.

Fix each jamb liner to its respective jamb using No8 countersunk headed woodscrews. Check the balance fixing holes is at the top of the jamb.

MK3 JAMB LINER EXAMPLE

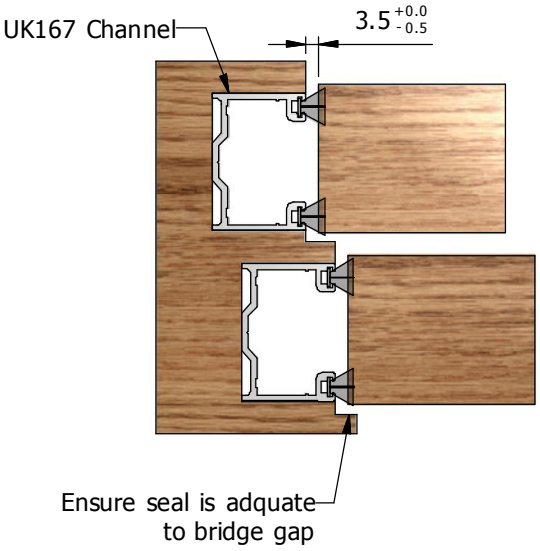

MK4 JAMB LINER EXAMPLE

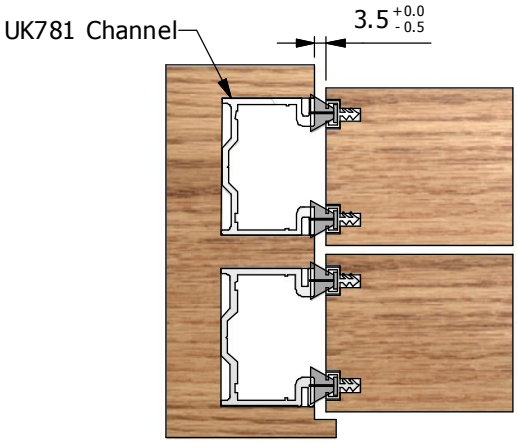

Please ensure brush pile holders are not fitted too close to the edges of the sash, to prevent the timber from splitting.

INSERTION OF 16H70 / UK132 PIVOT SHOES INTO JAMB LINER

The pivot shoe should be fitted into the jamb liner before the liner is fixed into the timber outer frame.

If a bar restrictor is to be fitted, please see page 19. Please note that the restrictor must be fitted into the channel above the pivot shoe before the liner is fixed into the timber outer frame.

Slide one shoe assembly into each liner, ensuring that the black pivot moulding is lowermost and the pivot bar retaining pocket is visible. (See diagram)

16H70 SHOE
ALUMATILT REGULAR OR HEAVY DUTY BALANCES ONLY.

UK132 SHOE
ULTRALIFT/TORSO BALANCES ONLY

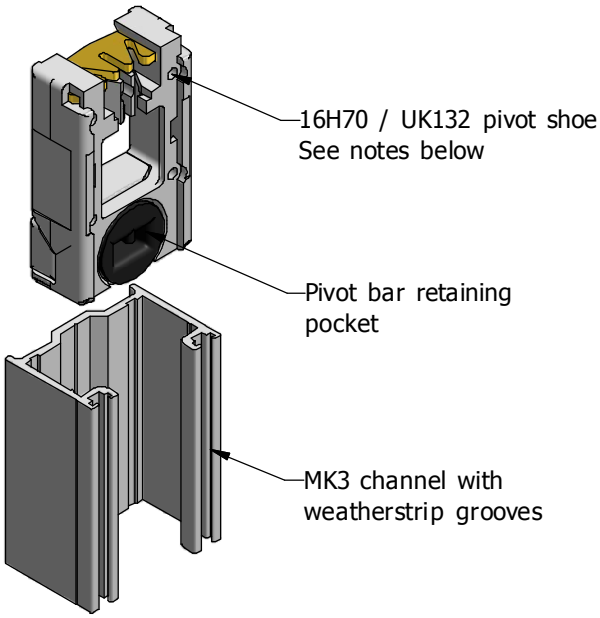

All of the information shown on this data sheet was correct at the time of issue. All information however is subject to change and therefore it is advisable to check with Caldwell Hardware to ensure that you have the latest issue level.

CALDWELL

SOLUTIONS THAT SET NEW STANDARDS

Telephone 024 7643 7900

Tilting Sash Balance fitting & Adjustment Using The EZ Tensioning Tool

1. Mount the balances into the outer frame, do not over-tighten the screws as this will distort the balance.

2. Attach the tensioning tool to the bottom pin of the balance rod.
   Make sure that the end hooks of the tensioning tool are fully engaged on the lower pin of the balance rod.
   Contact between the tensioning tool & the balance rod lower pin must be maintained at all times.
   A firm grip of the tensioning tool is required at all times when in use.
   Do not let the balance rod rotate as this will result in loss of tension.
   Connect the top pin into the centre slot on the pivot shoe & allow the balance to retract fully before releasing the tensioning tool.

   Note: to avoid damaging the balance, it is essential that it is not distorted whenever fitting, connecting or tensioning balances. No side loading should be applied as this will permanently affect the balance.

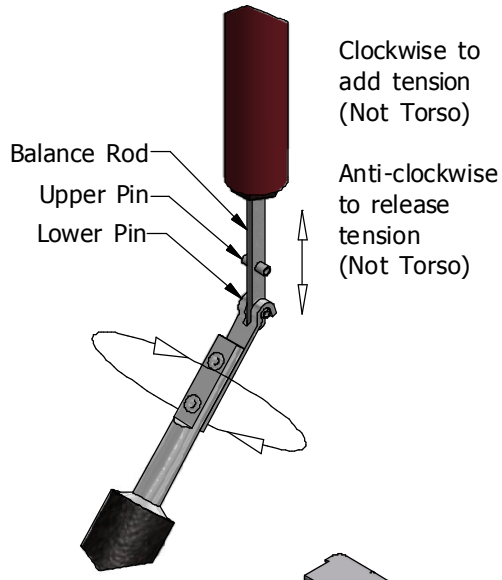

3. To engage the balance rod in the pivot shoe, the balance should be extended down by means of the tensioning tool until the upper pin of the bracket can be fully engaged in the central slot of the pivot shoe.
   The tensioning tool can now be disengaged.
   If fitting regular or heavy duty Alumitilt see below for tensioning details.

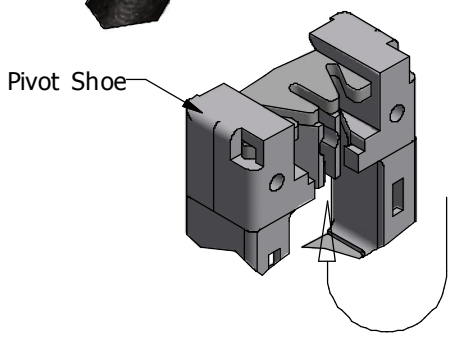

Upper pin of the balance bracket to engage here.

4. Tensioning for REGULAR or HEAVY DUTY ALUMITILT balances.
   To tension the balance it is necessary to apply the appropriate number of turns, in a clockwise direction, shown on the job sheet or tensioning chart, DATASHT-00086.
   Always tension both balances identically.
   During tensioning, position the end of the rod approx. 50mm down from the bottom of the aluminium tube, once tensioned insert the upper pin into the central slot in the pivot shoe.

5. Tensioning ULTRALIFT balances.
   Ultralift balances are pre-tensioned when manufactured & therefore should not normally require tensioning on the window.
   As a feature of their design the tension can be increased or decreased by a maximum which equals 1kg sash weight.
   This adjustment is a maximum & any further adjustment may damage the balance.

   If adjustment of the Ultralift balance is required, attach the tensioning tool to the bottom pin & remove the rod from the pivot shoe. Allow the bracket to retract to within approx. 50mm of the end of the tube. To release tension, rotate one turn anti-clockwise, & no further. To add tension, rotate the balance one turn clockwise, & no further.
   Reconnect the balance rod to the pivot shoe & check the operation of the sash. Always tension both balances identically.

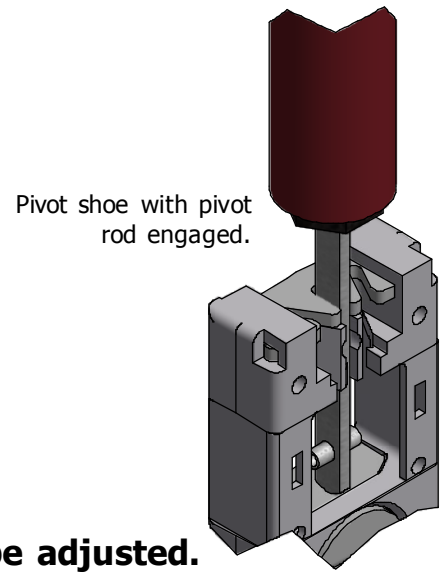

Torso balances are PRE-TENSIONED & can not be adjusted.

All of the information shown on this data sheet was correct at the time of issue. All information however is subject to change and therefore it is advisable to check with Caldwell Hardware to ensure that you have the latest issue level.

CALDWELL

SOLUTIONS THAT SET NEW STANDARDS

Telephone 024 7643 7900

Tensioning Chart for Spiral Balances

REGULAR ALUMATILT & SPIREX

BALANCE LENGTH mm		203	228	254	279	305	330	356	381	406	432	457	483	508	533	559	584	610	635	660	686	711	737	762	787	813	838	864	889	914	940	965	991	1016	1041	1067	1092	1118	1143	1169	1194	1220
INCHES		8	9	10	11	12	13	14	15	16	17	18	19	20	21	22	23	24	25	26	27	28	29	30	31	32	33	34	35	36	37	38	39	40	41	42	43	44	45	46	47	48
3	1	1	1	1	1																																						
6	2	1	1	1	1	1½	1½	1½	2	2	2	2½	3	3	3	3	2½	2½	2½	2½	2½	3	3	3	3	3	2	2	2													
	3	2	2	2	2	2½	2½	2½	3	3	3½	4	4½	5	5	5½	3½	3½	3½	3½	3½	4	4	4	4	4	3	3	3½	3½													
9	4	2	2½	3	3	3½	4	4	4½	4½	5	5	5½	6	6½	6½	4½	4½	4½	5	5	5	5½	6	6½	6½	3½	4	4½	4½	5	5	5	5	5½	5½	5½	6	6	6	6½	7
12	5	3	3½	4	4	4½	5	5	5½	5½	6	6	6½	7	7½	7½	5½	5½	5½	6	6	6	6½	7	7½	7½	4½	5	6	6	6½	6½	7	7	7	7	7½	7½	8	8	8½	9
15	6	2	2½	3	3	3½	4	4	4½	4½	4	4	4½	5	5½	5½	6½	6½	7	7	7	7½	7½	8	8½	8½	5½	6	7	7	7½	8	8½	8½	8½	9	9	9	9½	9½	9½	10
	7	3	3½	4	4	4½	5	5	5	5	5½	5½	5½	6	6	6½	5	5	5½	5½	6	6	6½	6½	7	7	6	7	8	8	8½	9	8	9½	9½	9½	9½	10	10	10	10½	11
18	8	2	2½	3	3	3	3½	3½	3½	3½	4	4½	5	5	5½	6	6½	6½	7	7	7½	7½	8	8	8½	8½	8	8½	9	9	9½	9½	10	10	10½	10½	10½	11	11	11	11½	12
21	9	2½	3	3½	3½	4	4½	4½	4½	4½	5	5½	5½	6	7	7	7½	7½	8	8	8½	8½	8½	9	9	9	9	9½	10	10½	10½	11	11	11	11½	11½	11½	12	12	12½	12½	13
24	10	3½	4	4½	4½	4½	5	5	5	5	5½	5½	6	6½	8	8½	9	9	9	9	9½	9½	9½	9½	10	10	8	8	8	8	8½	8½	9	9	9	9½	9½	9½	10	10	10½	11
	11	4	4½	5	5	5	5½	5½	5½	5½	6	6	6½	7	8½	9½	10	10	10½	10½	11	11	11	11½	11½	11½	8½	8½	8½	8½	9	9	9½	9½	10	10½	10½	11	11	11	11½	12
27	12	4½	5	5½	6	6	6	6	6	6	6½	6½	7	7	9½	10½	6½	6½	7	7	7½	7½	8	8	8½	8½	9	9	9	9	9½	10	10½	11½	11½	12	12	12	12½	12½	13	13
	13	5½	6	6	6½	6½	6½	6½	6½	6½	7	7½	8	9½	10	11	7½	7½	8	8	8	8½	9	9	9½	9½	10	10	10½	10½	11	11½	12	12	12	12½	12½	13	13	13	13½	13½
30	13.5	6	6	6½	7	7	7	7	7	7	7½	8	8½	10	10	11½	8	8	8½	8½	9	9	9½	9½	10	10	10½	11	11½	11½	12	12½	13	13	13½	13½	14	14	14½	14½	14½	14½
SASH WEIGHT lbs	WEIGHT kg	BLUE COUPLING																									RED COUPLING																WHITE COUPLING

HEAVY DUTY ALUMATILT & SPIRALIFT

BALANCE LENGTH mm		432	457	483	508	533	559	584	610	635	660	686	711	737	762	787	813	838	864	889	914	940	965	991	1016	1041	1067	1092	1118	1143	1169	1194	1220
INCHES		17	18	19	20	21	22	23	24	25	26	27	28	29	30	31	32	33	34	35	36	37	38	39	40	41	42	43	44	45	46	47	48
30	14	2	2½	3	3½	4	4½	5	5½	5½	6	6	6½	7	7½	8	8	8½	8½	9	9	9½	9½	10	10	10½	11	11	12	12½	13	13½	14
33	15	2	2½	3	3½	4½	5	5½	6	6	7	7½	7½	8	8½	9	9	9½	10	10	10½	11	11½	11½	12	12	12½	13	13½	14	14½	14½	15
36	16	3	3½	4	4½	5	5½	6	6	6½	7	8	8½	9	9½	10	10½	11	11	11	11½	12	12½	12½	13	13	13	13½	13½	14	14½	15	15½
	17	4	4½	5	5½	6	6½	7	7	7½	8	8½	9	9½	10	11	11½	12	12	12½	12½	13	13	13½	13½	14	14	14½	15	15	15½	16	16
40	18	5	5½	6	6½	7	7½	8	8	8½	9	9	9½	10	10½	11	11½	12	12½	13	13½	14	14½	15	15	15	15½	15½	16	16	16½	17	17
SASH WEIGHT lbs	WEIGHT kg	BLACK COUPLING																															

<u>To establish spring colour and tension turns required:</u>
Find appropriate balance length and read down until it coincides with required sash weight. That figure is the number of tension turns and the colour is that of the coupling required.

For sashes over 40lbs (18kg) refer to Ultralift or Torso information sheets.

Note: Tensioning chart is for guidance purposes only.

All of the information shown on this data sheet was correct at the time of issue. All information however is subject to change and therefore it is advisable to check with Caldwell Hardware to ensure that you have the latest issue level.

CALDWELL

SOLUTIONS THAT SET NEW STANDARDS

STANDARD PIVOT BAR SASH FITTING (NO HORNS)

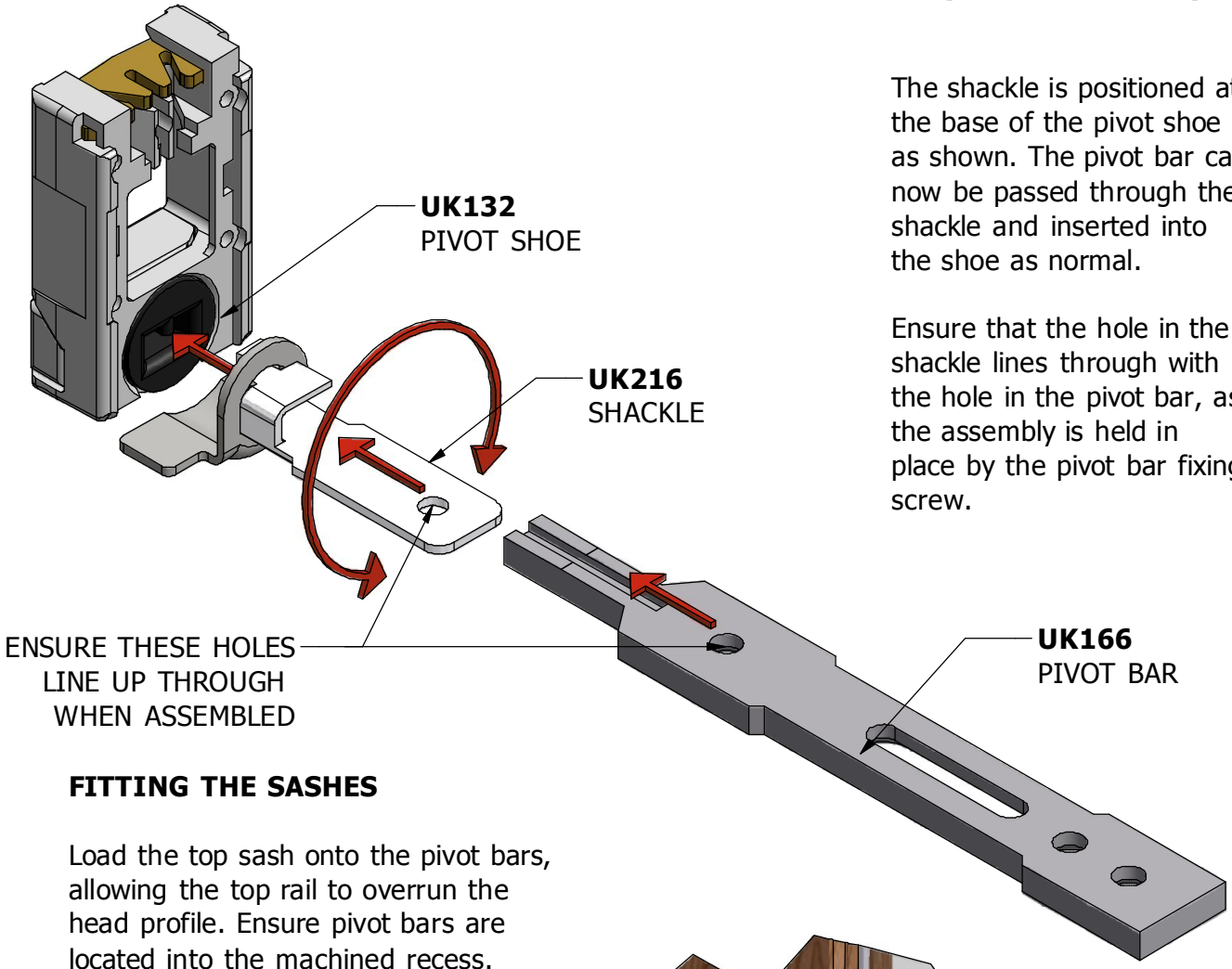

The shackle is positioned at the base of the pivot shoe as shown. The pivot bar can now be passed through the shackle and inserted into the shoe as normal.

Ensure that the hole in the shackle lines through with the hole in the pivot bar, as the assembly is held in place by the pivot bar fixing screw.

FITTING THE SASHES

Load the top sash onto the pivot bars, allowing the top rail to overrun the head profile. Ensure pivot bars are located into the machined recess.

Insert one screw into the slotted hole. Centralise the sash and insert the other two screws, ensuring that the one nearest the pivot shoe passes through the shackle. Pull the sash down and allow the guide latches to locate in the outer channel.

Fit the bottom sash in the same manner again making sure the shackles are correctly fitted. (Note:- if upper sashes have horns please refer to page 12).

FIT TRAVEL STOPS BEFORE CHECKING OPERATION OF THE SASHES. SEE PAGE 22.

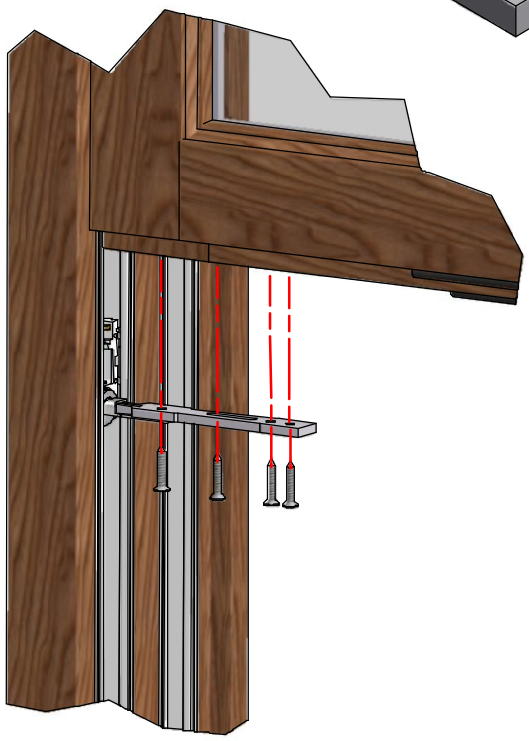

All of the information shown on this data sheet was correct at the time of issue. All information however is subject to change and therefore it is advisable to check with Caldwell Hardware to ensure that you have the latest issue level.

CALDWELL
SOLUTIONS THAT SET NEW STANDARDS

SASH FITTING - SLIDE OFF PIVOT BARS

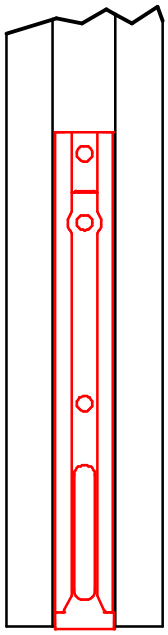

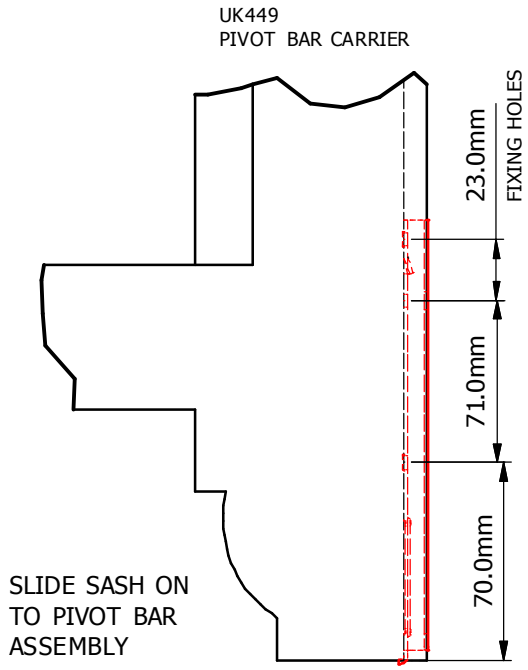

To remove top sash from the window frame,
tilt sash fully to horizontal and insert a thin blade under the rivet head,
lift out push in rivets UK469 and then slide sash off the pivot bars.

Refitting is the reverse of the removal.

Do not turn the pivot bars while the sash is removed
as the balances are still tensioned.

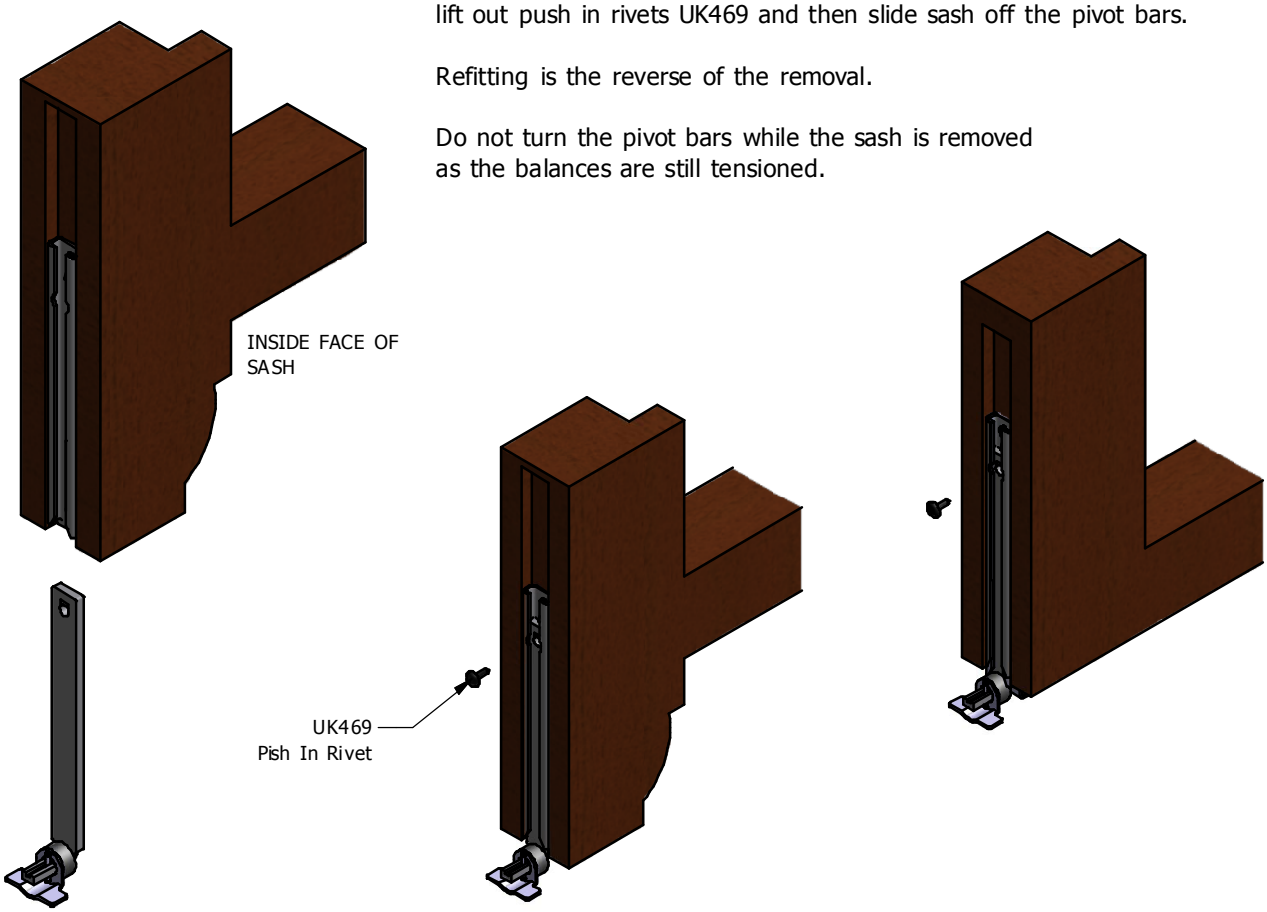

All of the information shown on this data sheet was correct at the time of issue.
All information however is subject to change and therefore it is advisable to check
with Caldwell Hardware to ensure that you have the latest issue level.

CALDWELL

SOLUTIONS THAT SET NEW STANDARDS

Telephone 024 7643 7900

Lift Out Pivot Shoe Fitting Instructions For Timb-a-Tilt

Step 1. Slide Pivot Shoes into the Jamb Profile

The Jamb profile can then be screwed in.

Step 2. Fix the UK765 Pivot bar flush to the internal face on the bottom of the sash.

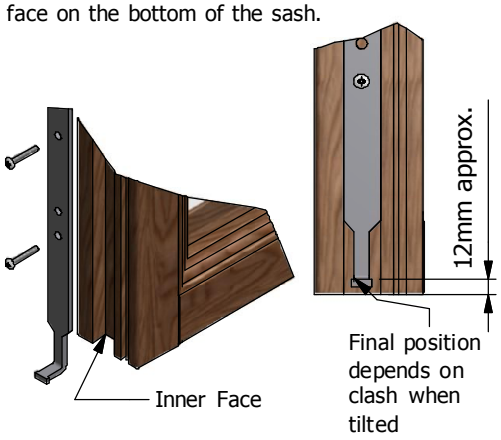

Step 3. Using an 8mm wide flat bladed screw driver, rotate the cam to the vertical position, locking the shoe into the profile.

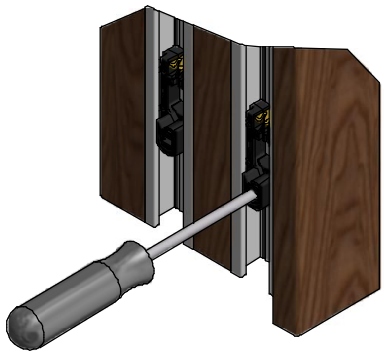

Step 4. Using a tensioning tool extend the balance and locate the top roll pin into the shoe.

Refer to Spring Balance Man-0004 for further information

Step 5. Locate the sash horizontally into the frame, locating the hammer head profile on the pivot bar into the shoe as shown.

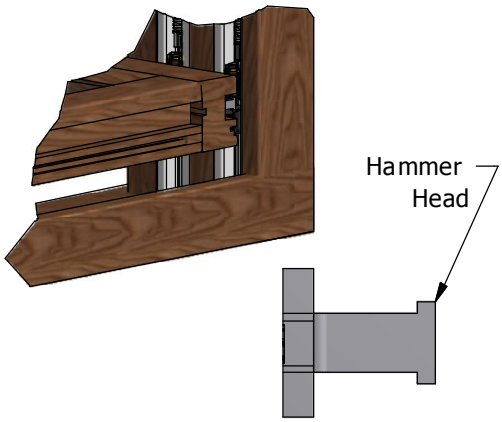

Step 6. Once the sash has been located into the shoe, rotate the window to the upright position.

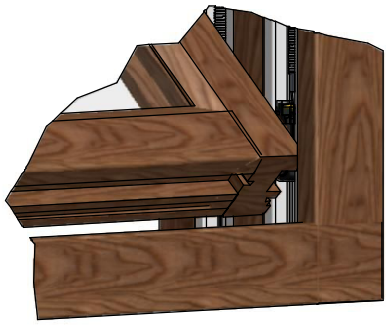

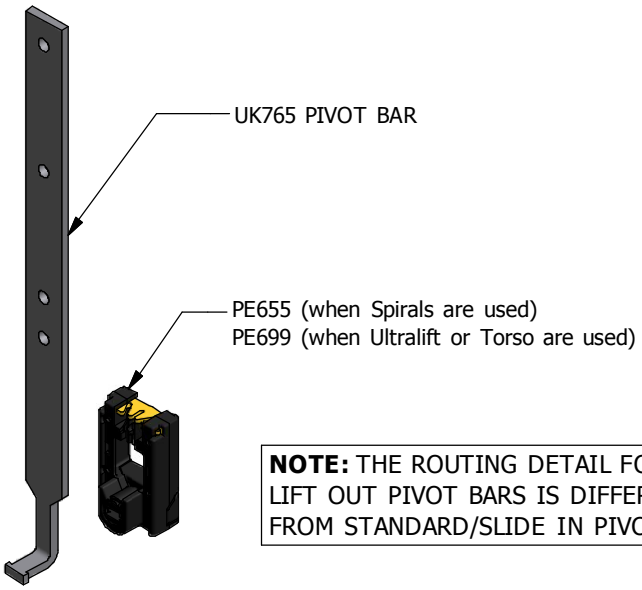

NOTE: THE ROUTING DETAIL FOR THE LIFT OUT PIVOT BARS IS DIFFERENT FROM STANDARD/SLIDE IN PIVOT BARS.

RECOMMENDED ROUTING DETAIL FOR LIFT OUT PIVOT BAR

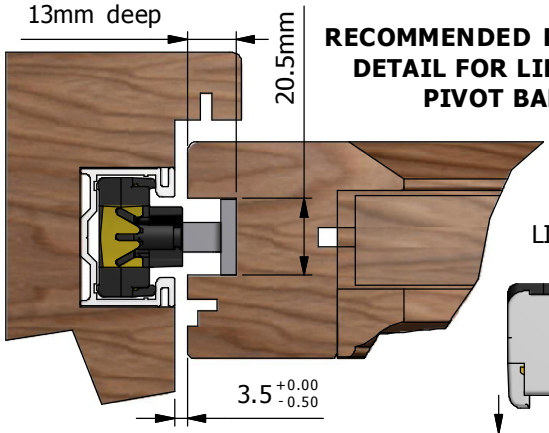

LIFT OUT PIVOT BAR FLOAT

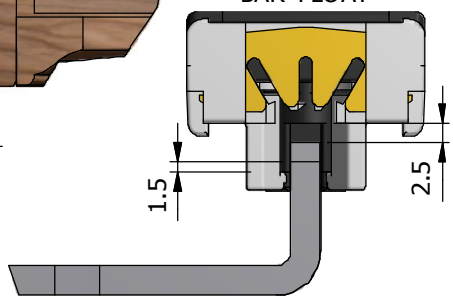

All of the information shown on this data sheet was correct at the time of issue. All information however is subject to change and therefore it is advisable to check with Caldwell Hardware to ensure that you have the latest issue level.

CALDWELL

SOLUTIONS THAT SET NEW STANDARDS

FITTING RESTRICTOR

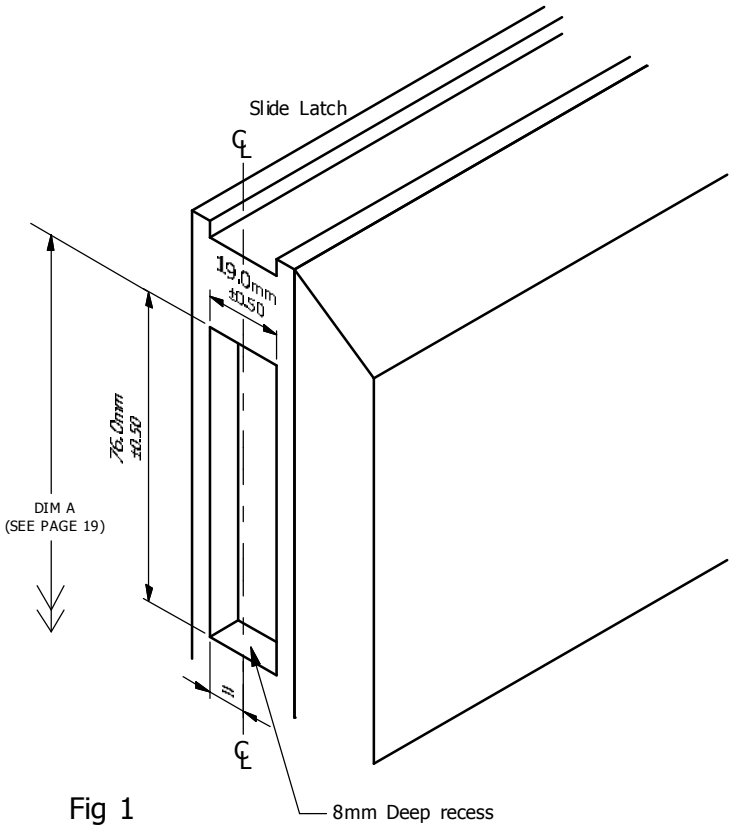

Fig 1

BAR TYPE

Recess both sash stiles as shown in fig 1 to a depth of 8mm at the position shown on page 19. (Alternatively continue the 19mm groove along the entire length).

Load the restrictor assembly into the jamb channel, ensuring that it is above the pivot shoe, see fig 2. Fix channels and balances as shown.

Gently tilt the sash and fit the sash slide plate and slide into the recess, see fig 3.

Screw the sash plate securely into position using pan head screws and check operation.

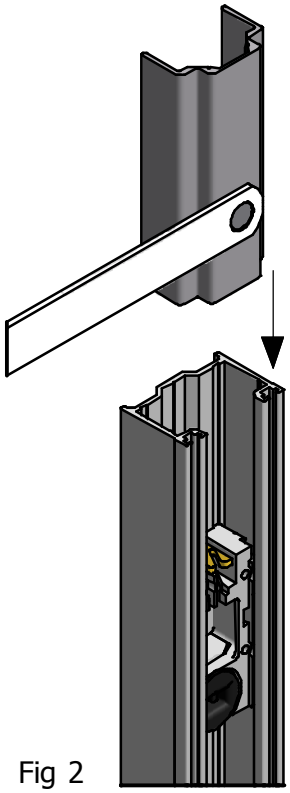

Fig 2

Side view of sash profile

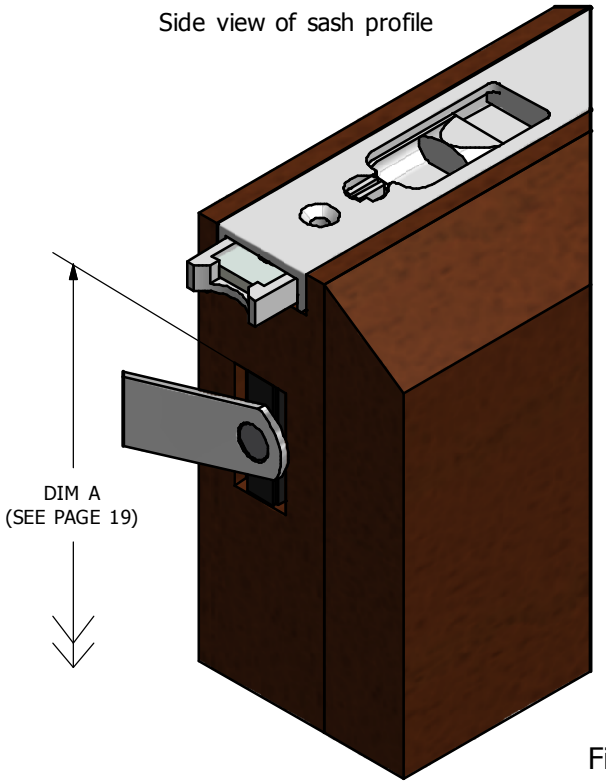

Fig 3

All of the information shown on this data sheet was correct at the time of issue. All information however is subject to change and therefore it is advisable to check with Caldwell Hardware to ensure that you have the latest issue level.

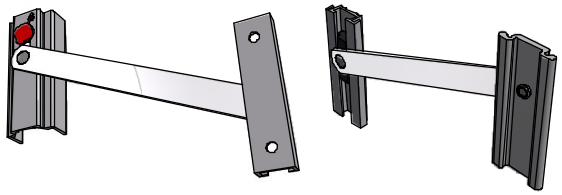

CALDWELL

SOLUTIONS THAT SET NEW STANDARDS

Telephone 024 7643 7900

Bar Restrictor Details

POSITION CHANNEL ON CENTRE LINE OF SASH PROFILE & DIM'A' FROM BOTTOM OF SASH, PAN HEAD FIXING SCREWS MUST BE USED TO FIX THE CHANNEL INTO THE SASH PROFILE. (WHEN USING UPVC WINDOWS SCREWS ARE TO BE FITTED INTO REINFORCEMENT).

NOTE: THE GAP BETWEEN SASH AND OUTER FRAME SHOULD BE INCREASED TO 3.5$\pm^{0.0}_{0.5}$ WHEN FITTING THESE RESTRICTORS. ENSURE THAT BAR RESTRICTORS ARE NOT FITTED ON SASHES ABOVE 35kg IN WEIGHT.

WINDOW SYSTEM	SASH HEIGHT 250mm - 450mm	DIM 'A'	SASH HEIGHT 451mm - 650mm	DIM 'A'	SASH HEIGHT 651mm - 1200mm	DIM 'A'
ANODIL	RA150AN	278mm	RA250AN	435mm	RA350AN	535mm
ALCOA SYSTEM 80	RA150TT	278mm	RA250TT	435mm	RA350TT	535mm
CLEARVIEW	RA150RU	278mm	RA250RU	435mm	RA350RU	535mm
DECEUNINCK	RA150JC	278mm	RA250JC	435mm	RA350JC	535mm
SPECTUS*	RA150RU	278mm	RA250RU	435mm	RA350RU	535mm
SPECTUS (security)*	RA150SP	278mm	RA250SP	435mm	RA350SP	535mm
JELD WEN	RA150RJ	278mm	RA250RJ	435mm	RA350RJ	535mm
ARDEN KINWARD	RA150AR	278mm	RA250AR	435mm	RA350AR	535mm
LB PLASTICS SHEERFRAME	RA150LB	278mm	RA250LB	435mm	RA350LB	535mm
MITRE-MASTER	RA150TT	278mm	RA250TT	435mm	RA350TT	535mm
PLASTMO/EUROCELL*	RA150RU	278mm	RA250RU	435mm	RA350RU	535mm
PLASTMO/EUROCELL (security)*	RA150SP	278mm	RA250SP	435mm	RA350SP	535mm
PLUS PLAN	RA150PP	278mm	RA250PP	435mm	RA350PP	535mm
REHAU 719	RA150RU	278mm	RA250RU	435mm	RA350RU	535mm
REHAU HERITAGE MK1	RA150RU	278mm	RA250RU	435mm	RA350RU	535mm
REHAU HERITAGE MK2	RA150PP	278mm	RA250PP	435mm	RA350PP	535mm
SAPA	RA150GP	278mm	RA250GP	435mm	RA350GP	535mm
SAPA DUALSLIDE	RA150AN	278mm	RA250AN	435mm	RA350AN	535mm
SMARTS SYSTEM	RA150RU	278mm	RA250RU	435mm	RA350RU	535mm
SWISH	RA150PP	278mm	RA250PP	435mm	RA350PP	535mm
TIMB-A-TILT (with mk3 jamb)	RA150TT	278mm	RA250TT	435mm	RA350TT	535mm
TIMB-A-TILT (with mk4 jamb)	RA150AN	278mm	RA250AN	435mm	RA350AN	535mm
VEKA MATRIX	RA150VK	278mm	RA250VK	435mm	RA350VK	535mm
VEKA MATRIX 2007	RA150VS	278mm	RA250VS	435mm	RA350VS	535mm
WHSMITH SYSTEM 10	RA150WH	278mm	RA250WH	435mm	RA350WH	535mm

* The RA150SP, RA250SP & RA350SP should be used for Spectus and Plastmo/Eurocell when security jamb packers are used.

SASH SHOWN TILTED

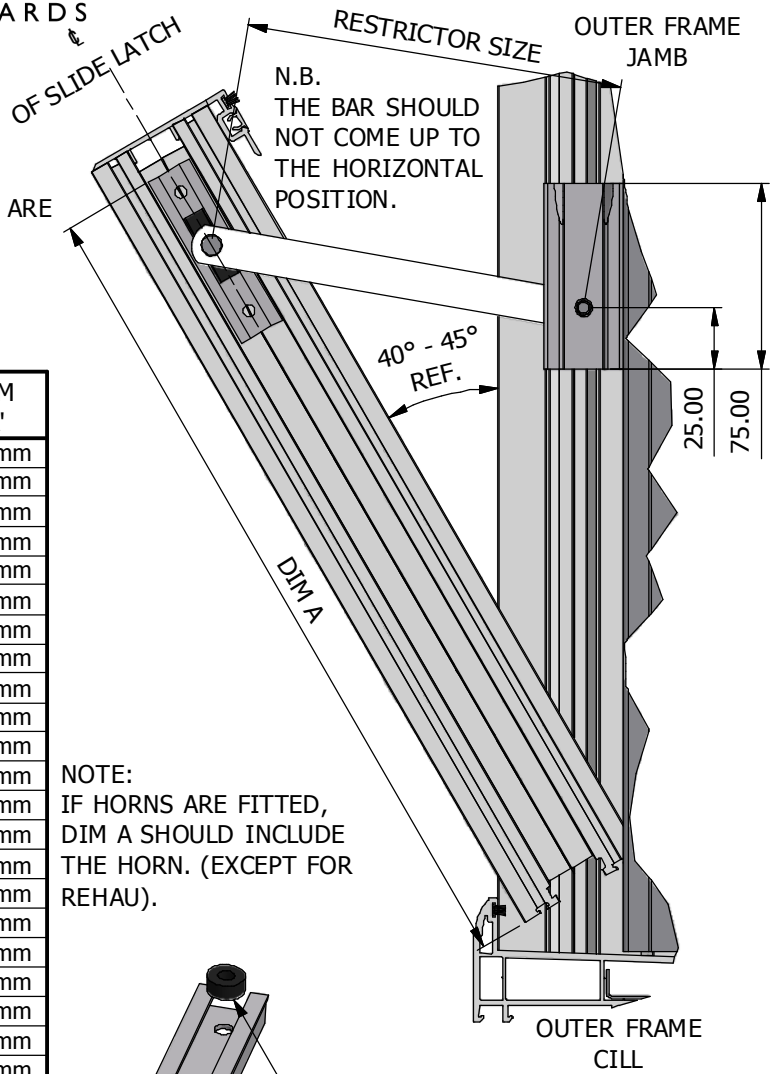

NOTE:
IF HORNS ARE FITTED, DIM A SHOULD INCLUDE THE HORN. (EXCEPT FOR REHAU).

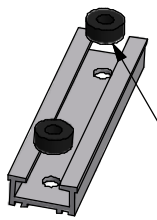

UK241 NYLON RING SOLD SEPARATELY. THE UK241 SHOULD BE USED WHEN LOW HEAD SCREWS ARE USED. IT ALSO OFFERS AN IMPROVED BUFFER OVER USING SCREWS ALONE.

All of the information shown on this data sheet was correct at the time of issue. All information however is subject to change and therefore it is advisable to check with Caldwell Hardware to ensure that you have the latest issue level.

DATASHT REF. 00141

ISSUE LEVEL 14

CALDWELL

SOLUTIONS THAT SET NEW STANDARDS

Telephone 024 7643 7900

HEAVY DUTY BAR RESTRICTOR (when used with Standard and Slide-in Pivot Bars)

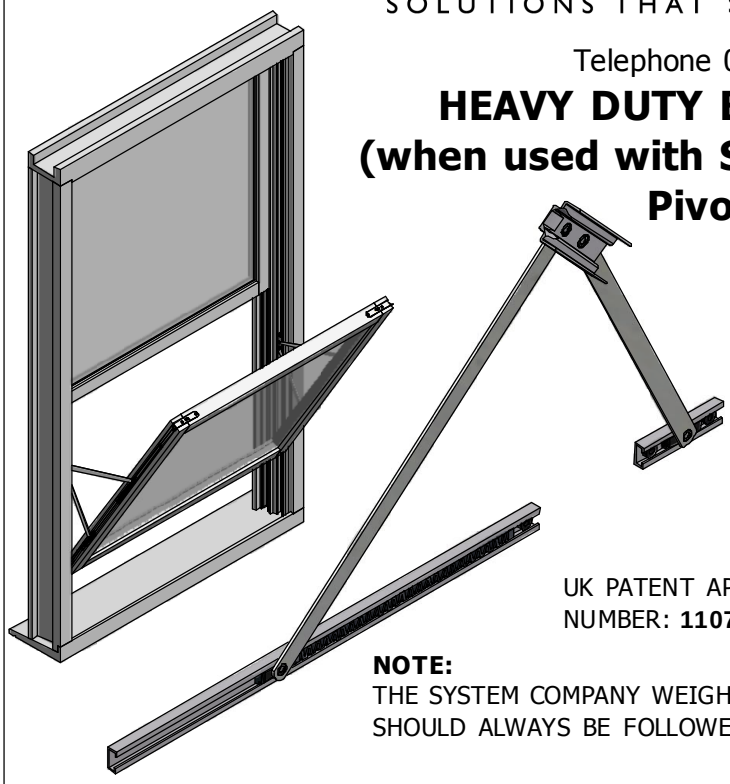

UK PATENT APPLICATION NUMBER: **1107417.6**

NOTE:
THE SYSTEM COMPANY WEIGHT GUIDELINES SHOULD ALWAYS BE FOLLOWED

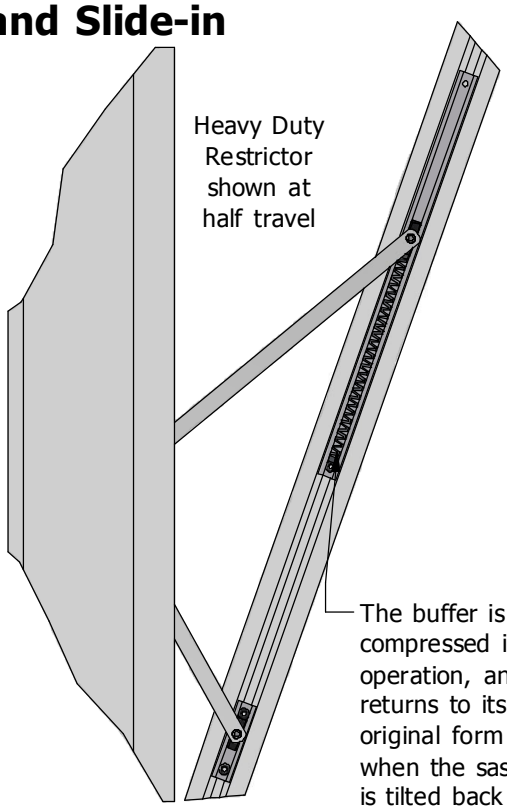

The Caldwell Heavy Duty Restrictor allows sashes on vertical sliding windows that weigh **35.5kg to 50kg** to be tilted inwards safely for cleaning purposes.

Unlike our standard restrictors, the heavy duty version does not come in different lengths, instead, it covers all sash heights from **900mm to 1550mm**.

The double armed restrictor supports the sash when accidently dropped, by distributing the load across the frame and the sash. The restrictor also contains a specially designed buffer to cushion the load, and ultimately increase safety levels for the user.

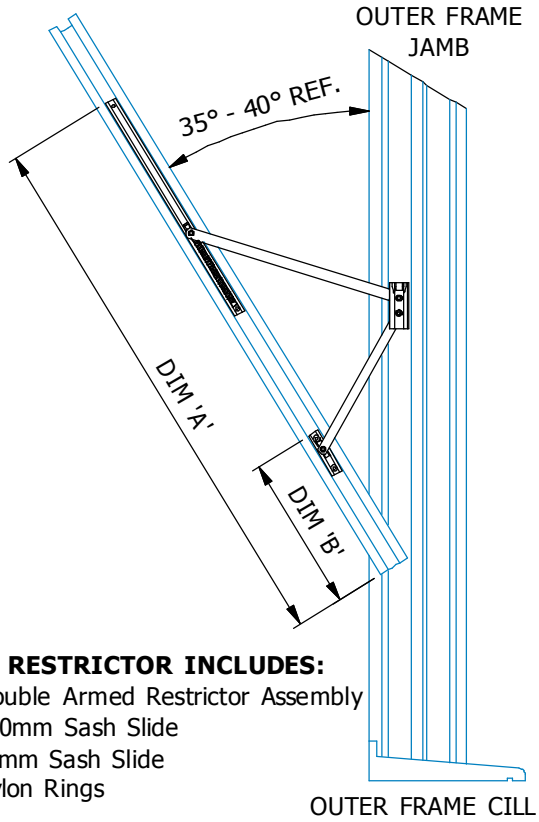

PART NUMBER	WINDOW SYSTEM	DIM 'A'	DIM 'B'
RA350RUHD	SMART SYSTEMS	875mm	255mm
RA350TTHD	TIMB-A-TILT	875mm	255mm
RA350SPHD	SPECTUS	875mm	255mm
RA350WHHD	WHS HALO*	875mm	255mm
RA350VSHD	VEKA MATRIX 2007	875mm	255mm
RA350SPHD	PLASTMO	875mm	255mm
RA350SPHD	EUROCELL	875mm	255mm
RA350PPHD	REHAU HERITAGE MK 2	875mm	255mm
RA350ANHD	SAPA DUALSLIDE	875mm	255mm
CONTACT CALDWELL	COMAR	TBC	TBC
CONTACT CALDWELL	DECEUNINCK	TBC	TBC
CONTACT CALDWELL	LB PLASTICS	TBC	TBC

*: Maximum sash weight limited to 40kg at the system companies request

NOTE:
IF HORNS ARE FITTED, DIM 'A' & 'B' SHOULD INCLUDE THE HORN LENGTH. (EXCEPT FOR THE REHAU SPRING LOADED HORN OPTION).

THE ABOVE SIZES ONLY APPLY WHEN USING STANDARD OR SLIDE IN PIVOT BARS. FOR FITTING SIZES WHEN USING LIFT-OUT PIVOT BARS, SEE DATASHEET-00690.

EACH RESTRICTOR INCLUDES:
1 x Double Armed Restrictor Assembly
1 x 400mm Sash Slide
1 x 75mm Sash Slide
3 x Nylon Rings

All of the information shown on this data sheet was correct at the time of issue. All information however is subject to change and therefore it is advisable to check with Caldwell Hardware to ensure that you have the latest issue level.

CALDWELL

SOLUTIONS THAT SET NEW STANDARDS

FITTING ACCESSORIES

FITTING TILT LATCHES UK150 & UK472

LATCH IN LOCKED POSITION

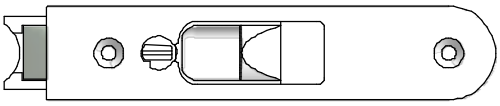

LATCH IN UNLOCKED POSITION

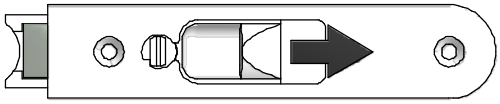

When fitting the tilt latches, ensure that the grooves at the top of the rails are free from wood shavings and the latches are not a tight fit or this will inhibit the operation. Check that the latches do not protrude past the ends of the top rails & fix into position using No6 x 32mm countersunk head woodscrews. DO NOT OVERTIGHTEN.

FITTING TRAVEL STOPS TT220STOP & UK233

WINDOWS WITH EQUAL SASH HEIGHTS

Fit UK233 (130mm long) both sides at top of inner channel and UK232 (220mm long) both sides at the bottom ot the outer channel.

WINDOWS WITH UNEQUAL SASH HEIGHTS (Smaller top Sash)

Caldwell will supply the lower travel stops cut to the nearest 100mm above the required length. They can be used as supplied or should you wish to gain maximum opening of the top sash they can be cut down as follows:-

After fitting the top sash balances, gently slide the top sash down until resistance is felt. Slide the sash back up 15mm, note the distance between the cill and the underside of the top sash and cut the stop to this length. UK233 should still be used at the head.

WINDOWS WITH SMALLER BOTTOM SASHES

Consult Caldwell Hardware.

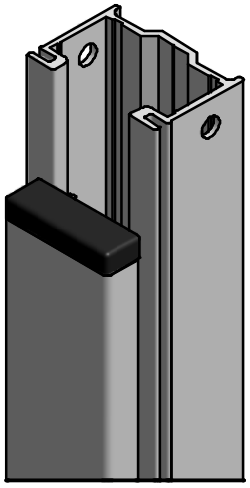

DO NOT OPERATE THE WINDOW UNTIL THE UPPER AND LOWER TRAVEL STOPS ARE FITTED

FITTING SASH LOCK AND KEEP (447LBPL SHOWN)

Fix the sash lock and keep using No6 countersunk head woodscrews.

Ensure that the keep is fitted central to the sash lock.

NOTE:

On sashes over 800mm wide, two sash locks should be used.

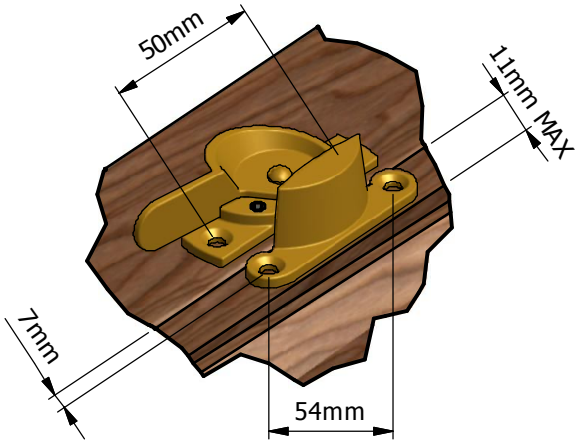

All of the information shown on this data sheet was correct at the time of issue. All information however is subject to change and therefore it is advisable to check with Caldwell Hardware to ensure that you have the latest issue level.

CALDWELL

SOLUTIONS THAT SET NEW STANDARDS

Travel Restrictors

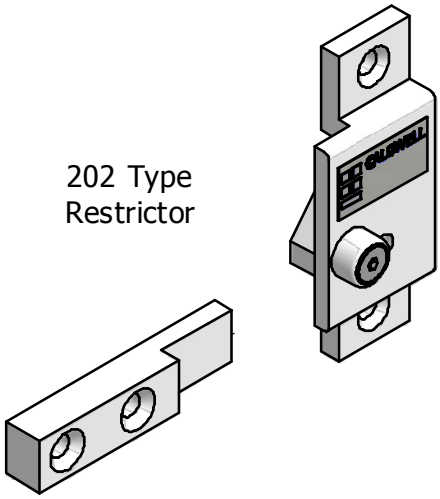

The Caldwell range of vertical sliding window restrictors limit the travel of the sashes. The result of restricting sash travel is a reduced amount of clear opening on the window. Restriction may be required to enhance safety, to enhance security, or where a combination of both is required.

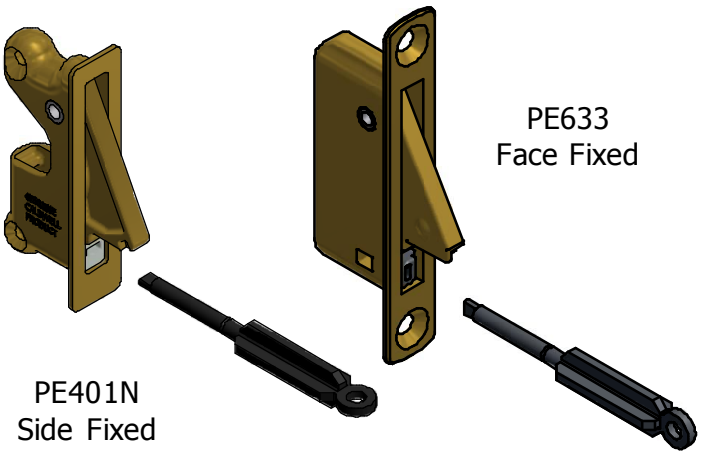

All Caldwell vertical sliding window restrictors are releasable as well as self engaging.
The releasable feature allows sashes to still be opened fully when required i.e. for cleaning or maintenance. The self engaging feature ensures that all of the restrictors re-engage on their own when the sashes are returned to their closed position.
They also have a locking feature allowing the sash to be locked in either the restricted or unrestricted position.
All Caldwell vertical slider restrictors are suitable for use on PVCu, Timer, Aluminium, Steel and Composite vertical sliding windows.

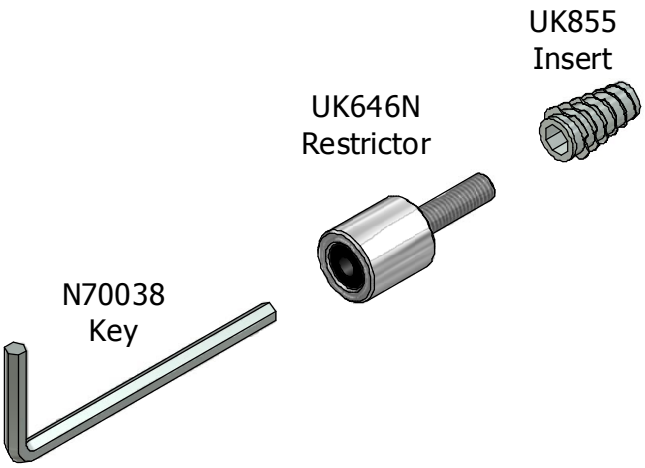

Also available is a UK646N Roller restrictor that has various benefits of restriction and ease of fitting. The UK855 threaded insert and the N70038 key are also required for this option.
Note: there is also a double stage version of this restrictor, see manual: MAN-0014, for more details).

For fitting instructions for any of our restrictors please see our Vertical Sliders Restrictor Manual (available to be sent by Caldwell - MAN-0014)

All of the information shown on this data sheet was correct at the time of issue. All information however is subject to change and therefore it is advisable to check with Caldwell Hardware to ensure that you have the latest issue level.

CALDWELL

SOLUTIONS THAT SET NEW STANDARDS

Timb-A-Tilt Vertical Slider

MINIMUM GAP BETWEEN SASH & FRAME MUST BE 3.5mm +0.0 -0.5

Security Products also available please see Data sheets 00515 & 00516

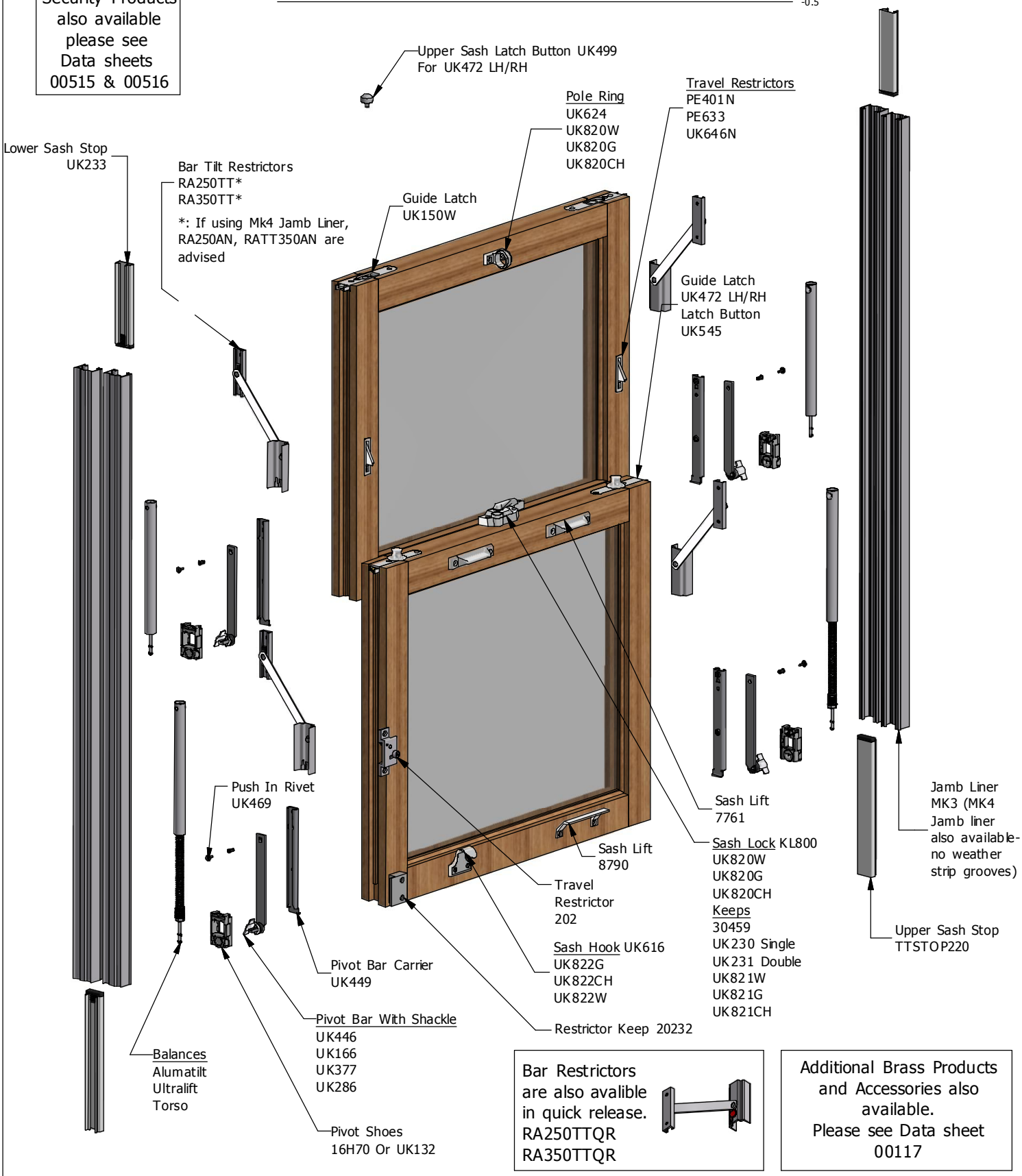

Bar Restrictors are also avalible in quick release.
RA250TTQR
RA350TTQR

Additional Brass Products and Accessories also available.
Please see Data sheet 00117

All of the information shown on this data sheet was correct at the time of issue. All information however is subject to change and therefore it is advisable to check with Caldwell Hardware to ensure that you have the latest issue level.

CALDWELL

SOLUTIONS THAT SET NEW STANDARDS

Telephone 024 7643 7900

Fitting Details - PE370KIT Rack Bolt Kit For Timber Arched Head Windows

On Arched Head windows requiring the tilt facility it is not possible to use standard Caldwell tilt latches. Caldwell recommend the Rack Bolt kit (shown below) which is suitable for most timber tilting windows. This enables the window to be retained in its normal position during operation and can be retracted by the use of a key to enable the tilt facility.

View From Above

The diagram shows the recommended hole position for the key hole. This must line up with the rack bolt.

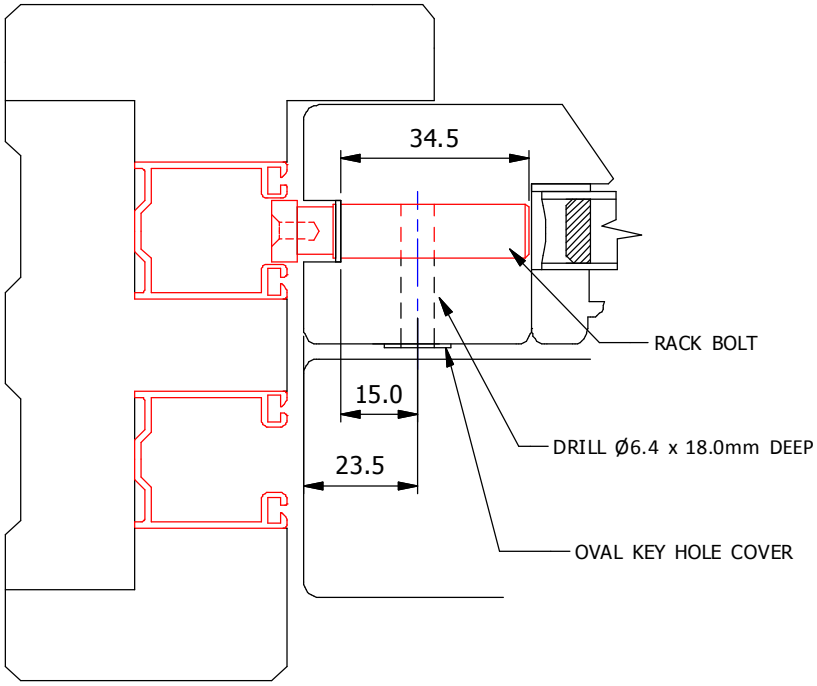

Side View

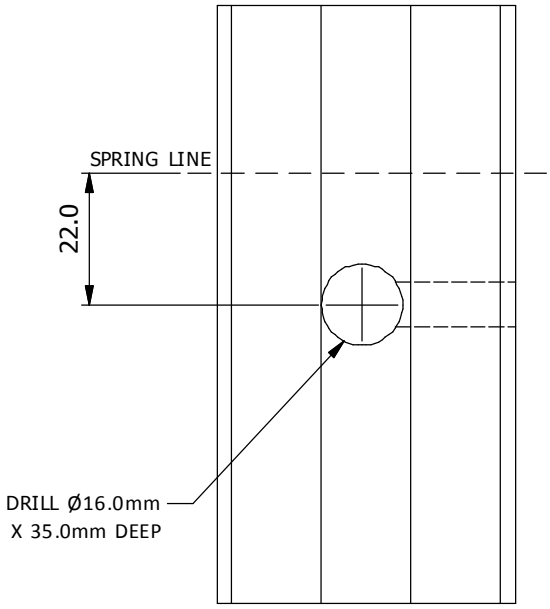

The diagram shows the recommended hole position for the rack bolt to be fitted into the side of the sash.

Front View

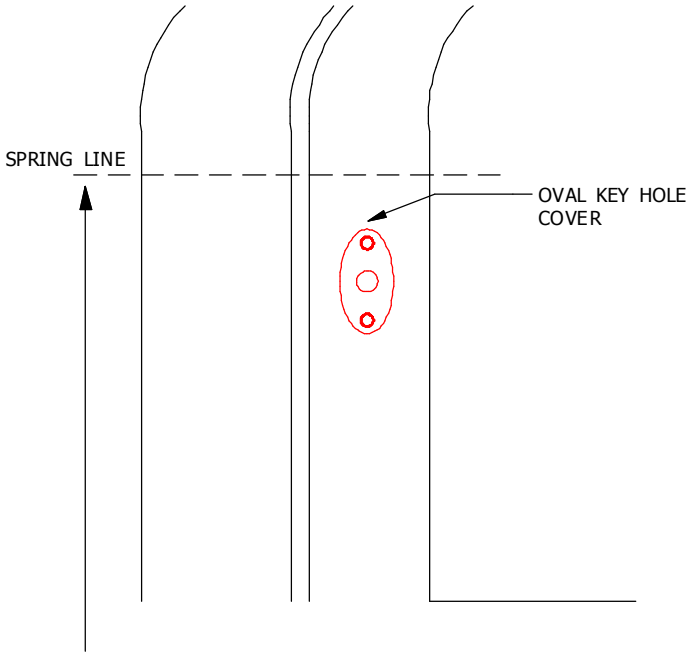

TOP OF THE BALANCE TO LINE UP WITH THE SPRING LINE

All of the information shown on this data sheet was correct at the time of issue. All information however is subject to change and therefore it is advisable to check with Caldwell Hardware to ensure that you have the latest issue level.

DATASHT REF. 00342 ISSUE LEVEL 07

CALDWELL

SOLUTIONS THAT SET NEW STANDARDS

Telephone 024 7643 7900

UK793 Draught Plug & Bottom Sash Preparation

INSTALLATION

The UK793 draught plug has been designed to fit into our MK3 & MK4 channel when fitted into the Timb-A-Tilt system. In conjunction with the draught plug, the side of the bottom sash should also be prepared to suit the additional brush pile holder for maximum air flow reduction.

Fig 1

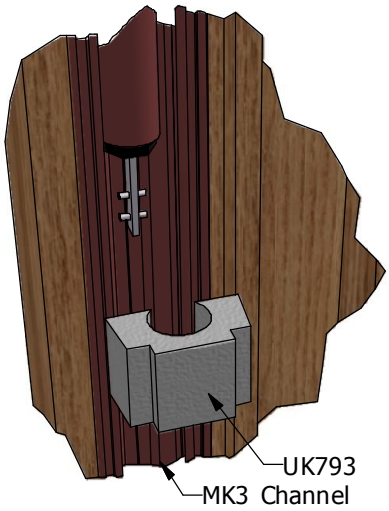

Fig 2

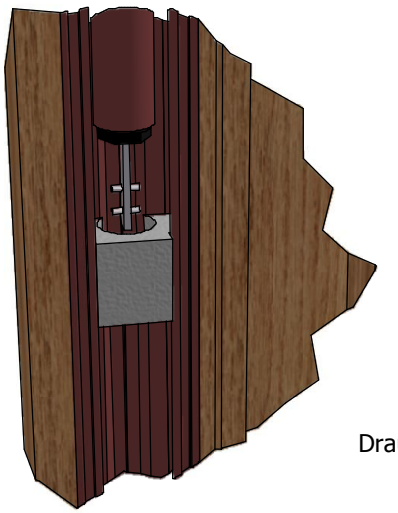

Fig 3

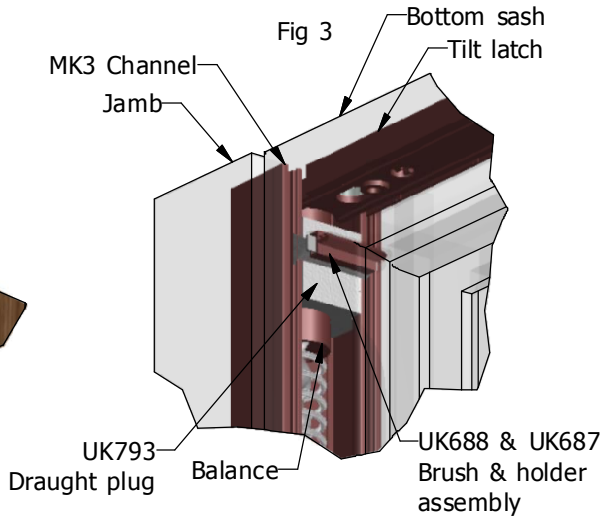

When fitting UK793 draught plug, ensure that the bottom sash is tilted forward. Ensure the bottom balance is disconnected from the pivot shoe. Insert UK793 into the MK3 channel below the retracted balance as shown in fig 1 & fig 2.
Once UK793 is inserted into the MK3 channel, slide it up over the balance so that it is just under the tilt latch when the bottom sash is in the closed position, as shown in fig 3. The UK793 draught plug can be inserted directly over the balance without disconnecting the balance. However this may not give the best seal. When this item is installed into the window jamb, it must be taken into account that other items that run in the jamb could come into contact with the draft plug.
In some cases the top travel stop may need to be longer. This draught plug can be used on Ø14 Spiral, Ø17 Ultralift & Ø17 & Ø19 Torso balances. If the draught plug is being used on Ø14 Spiral balances, a PVC-U balance tube is recommended to help seal.

SASH PREPARATION

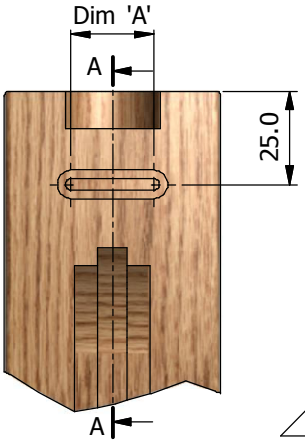

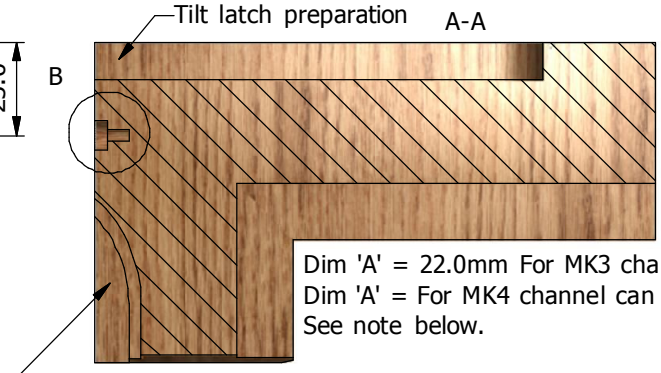

Dim 'A' = 22.0mm For MK3 channel
Dim 'A' = For MK4 channel can vary.
See note below.

The vertical machining detail needs to be cut short for the brush seal machining detail to be added.

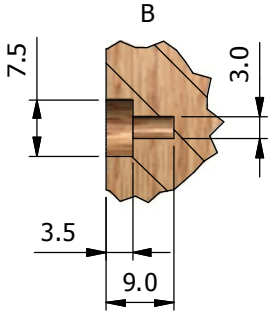

UK688
Brush seal holder

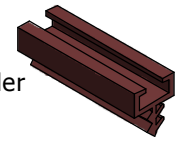

UK687
Brush seal

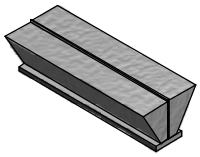

To ensure that the UK793 draught plug is sealing to its maximum potential, a piece of UK687 brush Pile & UK688 brush pile holder must be fitted. Machine the side of the bottom sash as shown above. This machining detail shows the preparation needed if the MK3 channel has brush seal fitted.
If brush seal is fitted to the sash, or MK4 channel is fitted, make the brush seal slot in the side of the bottom sash wide enough so that all the brush seals meet. The vertical machining on the side of the sash must be cut short to enable material for the horizontal slot to be added. The brush seal holder can then be inserted.

All of the information shown on this data sheet was correct at the time of issue. All information however is subject to change and therefore it is advisable to check with Caldwell Hardware to ensure that you have the latest issue level.

CALDWELL

SOLUTIONS THAT SET NEW STANDARDS

Telephone 024 7643 7900

EGRESS TIMBER WINDOW KIT - OVERVIEW

The Caldwell Egress Window solution allows window fabricators to produce smaller windows which will allow them to conform to the clear opening sizes as stated in "The Building Regulations 2010" document covering fire safety. Utilising this system, and fitting the egress components, the bottom sash can be lifted upward and inward so that it becomes clear of the bottom of the top sash leaving a clear opening for egress purposes.

NOTE: The tilting function is purely for fire escape purposes, so should not be used as an everyday function (i.e. it should not be used for increasing ventilation purposes). The arms will need be reset when fully locked out, please refer to DATASHEET-00665 for more information (or see www.caldwell.co.uk/pdf.1817.pdf). Extra care should be taken if cleaning takes place, ensuring the sash is fully supported at all times.

As the system is a safety feature, it should be routinely tested by the user. The maximum lower sash weight to use this system is 20kg.

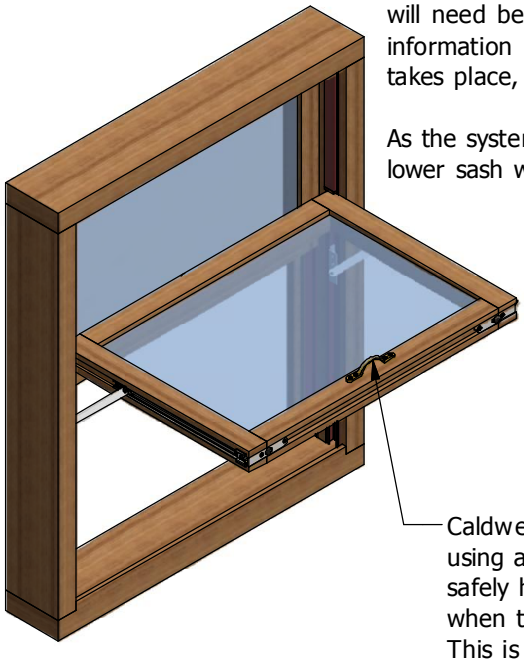

Caldwell recommend using a "D" handle to safely hold the sash when tilting inwards. This is not included in the kit (UK650 shown).

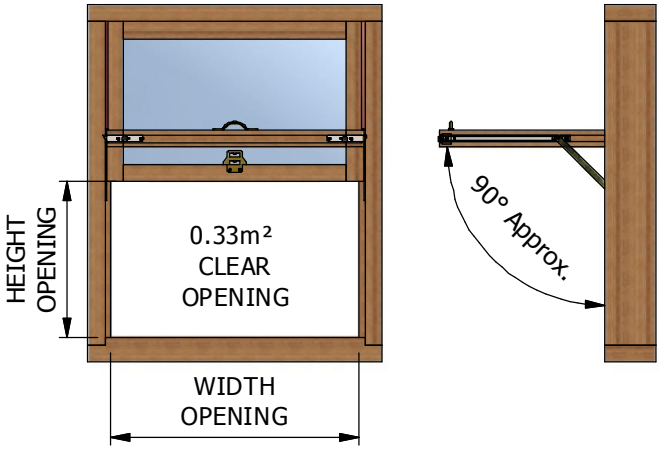

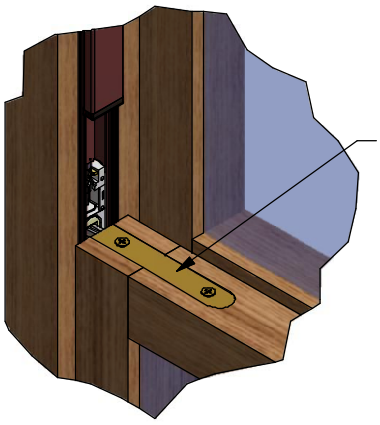

Tilt Latch cover plates are also available (UK842). These are not included in the kit.

To achive a 0.33m² clear opening, it must be at least 450mm in one axis. Therefore the opening dimensions must be at least:
734mm wide / 450mm high
OR
450mm wide / 734mm high
NOTE: If horns are on the window, this should be included in the clear opening calcualtion

EACH KIT CONTAINS:

- 1 x RIGHT HAND EGRESS RESTRICTOR SLIDE
- 1 x LEFT HAND EGRESS RESTRICTOR SLIDE
- 2 x RESTRICTOR ARMS
- 2 x PIVOT SHOES
- 2 x PIVOT BARS
- 2 x LEFT HAND AND RIGHT HAND TILT LATCHES
- 2 x NYLON TILT LATCH BUTTONS
- 4 x SASH SPACER KITS
- 2 x NYLON RINGS

PART NUMBER	EGRESS KIT FOR WINDOW SYSTEM
KP2592	TIMB-A-TILT

For fitting instructions, please see DATASHEET-00658 & DATASHEET-00666. For user information see DATASHEET-00665 (or see www.caldwell.co.uk/pdf.1817.pdf)

Note: Spring Balances sold separately. The relevant window sytem order form must be used to calculate (The correct order form must be used - OF364).

All of the information shown on this data sheet was correct at the time of issue. All information however is subject to change and therefore it is advisable to check with Caldwell Hardware to ensure that you have the latest issue level.

CALDWELL

SOLUTIONS THAT SET NEW STANDARDS

Telephone 024 7643 7900

TIMBER EGRESS FIXING DIMENSIONS

SASH CLOSED

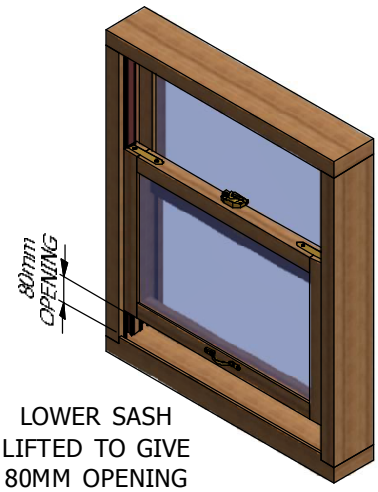

LOWER SASH LIFTED TO GIVE 80MM OPENING

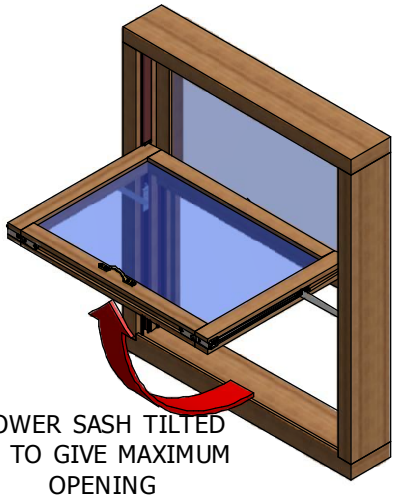

LOWER SASH TILTED IN TO GIVE MAXIMUM OPENING

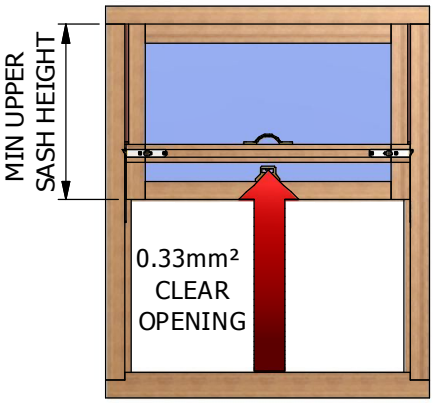

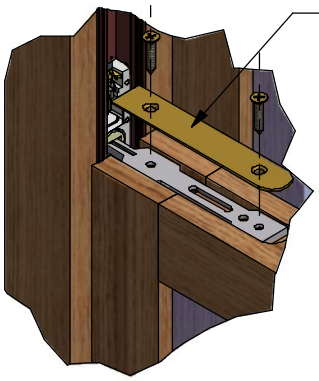

PIVOT BAR COVER PLATES ARE AVAILABLE FOR THIS SYSTEM (NOT INCLUDED IN THE KIT).

PART NUMBERS:
POWDER COAT WHITE - UK842HIPCAWHITE
POWDER COAT BROWN - UK842B
PLATED DAWN GOLD - UK842DG
PLATED CHROME - UK842CH

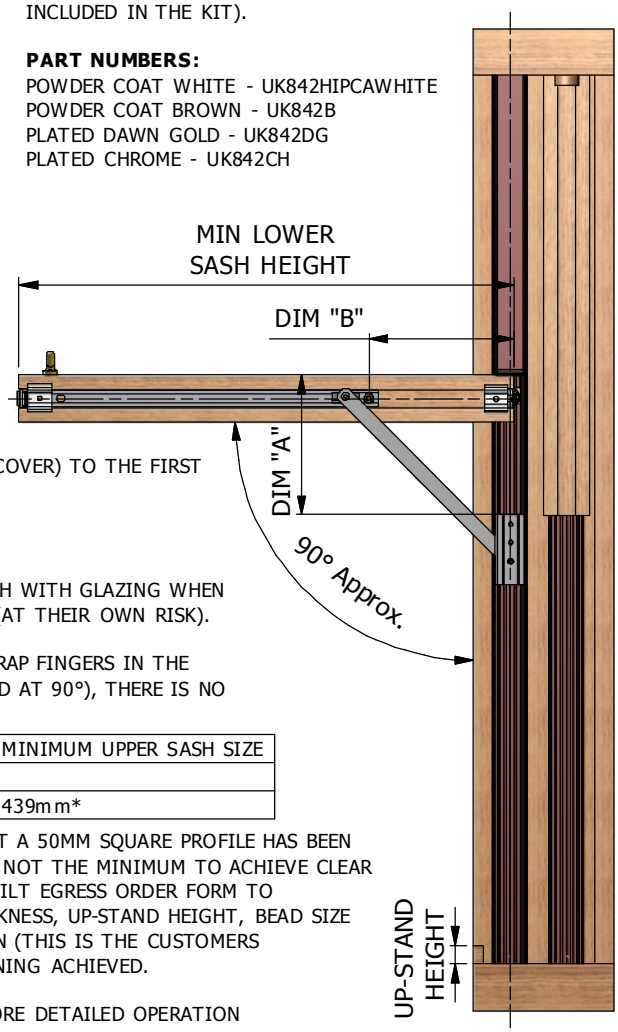

NOTE:
DIMENSION **"A"** IS FROM THE BOTTOM OF THE TRAVEL STOP TO THE TOP OF THE JAMB SLIDE

DIMENSION **"B"** IS FROM THE TOP OF THE LOWER SASH MEETING RAIL (INCLUDING TOP COVER) TO THE FIRST FIXING HOLE OF THE SASH SLIDE

THE UPPER SASH CAN OPERATE AS NORMAL

THE MAXIMUM SASH LOCK HEIGHT SHOULD BE 36MM, IN ORDER THAT IT DOES NOT CLASH WITH GLAZING WHEN TILTING THE SASH INWARDS. LARGER SASH LOCKS CAN BE TRIALLED BY THE CUSTOMER (AT THEIR OWN RISK).

IMPORTANT: TAKE CARE WHEN USING & INSTALLING THE RESTRICTOR ARMS TO NOT TRAP FINGERS IN THE ASSEMBLY. OTHER THAN WHEN THE WINDOW IS THE FULL LOCKED OUT POSITION (TILTED AT 90°), THERE IS NO FRICTION HOLDING THE SASH UP.

PART NO.	WINDOW SYSTEM	DIM "A"	DIM "B"	MINIMUM LOWER SASH SIZE	MINIMUM UPPER SASH SIZE
KP2592	TIMB-A-TILT	149.5*	152*	530mm*	439mm*

* **NOTE**: THE MINIMUM SIZES AND FIXING DIMENSIONS THAT ARE SHOWN ASSUME THAT A 50MM SQUARE PROFILE HAS BEEN USED. THE MINIMUM SIZES SHOWN ARE TO FIT THE EGRESS SYSTEM INTO THE PROFILE, NOT THE MINIMUM TO ACHIEVE CLEAR OPENING. IN ORDER TO ESTIMATE THE CLEAR OPENING PLEASE FORWARD THE TIMB-A-TILT EGRESS ORDER FORM TO CALDWELL (OF364). DUE TO THE VARYING NATURE OF TIMBER PROFILES (PROFILE THICKNESS, UP-STAND HEIGHT, BEAD SIZE ETC.), CALDWELL CAN TAKE NO RESPONSIBILTY FOR THE CLEAR OPENING CONFIRMATION (THIS IS THE CUSTOMERS RESPONSIBILTY). WHEN THE WINDOW HAS HORNS, THIS ALSO AFFECTS THE CLEAR OPENING ACHIEVED.

FOR INSTALLATION OF THE BALANCES AND PIVOT BARS, SEE DATASHEET-00666. FOR MORE DETAILED OPERATION INSTRUCTIONS SEE DATASHEET-00657.

All of the information shown on this data sheet was correct at the time of issue. All information however is subject to change and therefore it is advisable to check with Caldwell Hardware to ensure that you have the latest issue level.

CALDWELL

SOLUTIONS THAT SET NEW STANDARDS

TIMB-A-TILT VS BALANCE ORDER FORM

CUSTOMER DETAILS	ORDER No.
	CONTACT:
	DELIVERY DATE:
	TEL No.
	FAX No.

WINDOW DETAILS

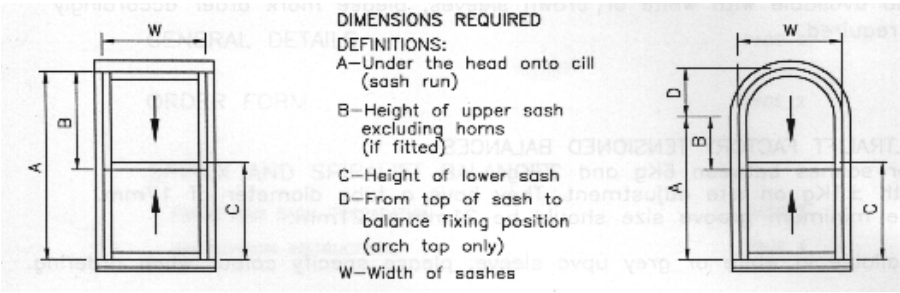

NOTE: Sash weights are based on 50mm square profile in softwood unless otherwise stated.
For accuracy it is preferable that you provide a fully glazed sash weight.

We cannot accept responsibility for goods supplied incorrectly if accurate sash weights have not been provided.

GEORGIAN BARS (PLANT ON TYPE)			YES	☐	NO	☐
(IF YES- SPECIFY NO. HORIZONTAL & NO. VERTICAL BARS)			HORIZONTAL		VERTICAL	
PRE-TENSIONED BALANCES ONLY			YES	☐	NO	☐
TORSO BALANCES ONLY			YES	☐	NO	☐
TIMBER TYPE			SOFTWOOD	☐	HARDWOOD	☐
MK3 JAMB LINER	WHITE	☐	BROWN	☐	NOT REQ'D	☐
MK4 JAMB LINER	WHITE	☐	BROWN	☐	NOT REQ'D	☐

REF.	QTY OF WINDOWS	DIM "W" (mm)	DIM "A" (mm)	DIM "B" (mm)	DIM "C" (mm)	DIM "D" (mm)	SIZE OF HORN	GEORGIAN BARS (TICK)	GLAZING CONFIG E.G. 4-16-4	GLAZED SASH WEIGHT (kg)	
								☐			UPPER
											LOWER
								☐			UPPER
											LOWER
								☐			UPPER
											LOWER
								☐			UPPER
											LOWER
								☐			UPPER
											LOWER

STANDARD OPERATIONAL KIT ACCESSORIES

PIVOT BAR KITS - PIVOT SHOES ARE AUTOMATICALLY ORDERED WITH THIS KIT.			STANDARD PIVOT BAR KIT	☐	SLIDE IN PIVOT BAR KIT ☐
BASIC KIT ACCESSORIES - TRAVEL STOPS & TILT LATCHES			WHITE	☐	BROWN ☐
BALANCE TUBES	WHITE	☐	BROWN	☐	GREY (NOT SPIRALS) ☐
BAR RESTRICTORS	BOTH UPPER & LOWER SASH	☐	LOWER SASH ONLY	☐	NOT REQUIRED ☐
QUICK RELEASE OPTION FOR BAR RESTRICTORS		YES	☐	NO	☐
HEAVY DUTY BAR RESTRICTORS IF REQUIRED?		YES	☐	NO	☐

ALL OTHER ACCESSORIES CAN BE FOUND ON THE ACCESSORIES ORDER FORM (i.e. SASH LOCKS, SASH LOCK KEEPS & SASH LIFTS)
PLEASE CONTACT CALDWELL TECHNICAL FOR MORE INFORMATION.

PLEASE REFER TO DATASHEET 00363 FOR STANDARD WINDOW DIMENSION TERMINOLOGY

THIS ORDER IS ACCEPTED UNDER OUR CURRENT 'TERMS & CONDITIONS OF SALE' COPIES AVAILABLE UPON REQUEST.