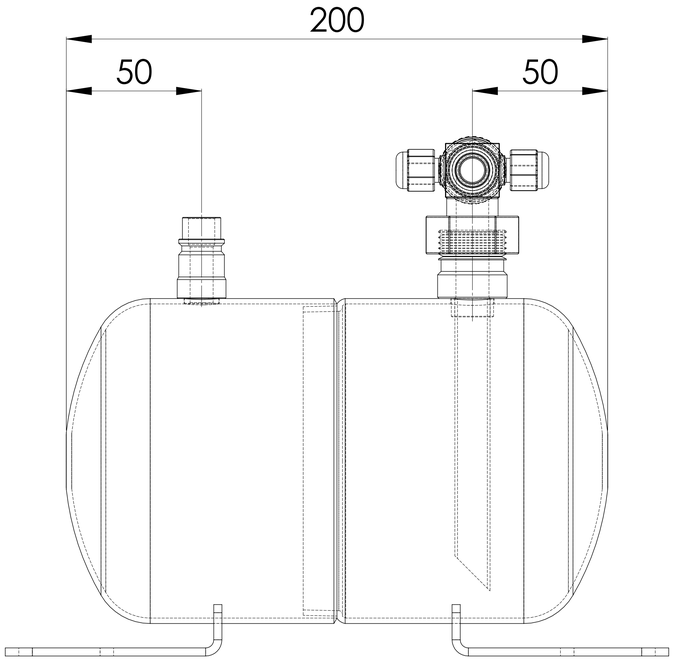

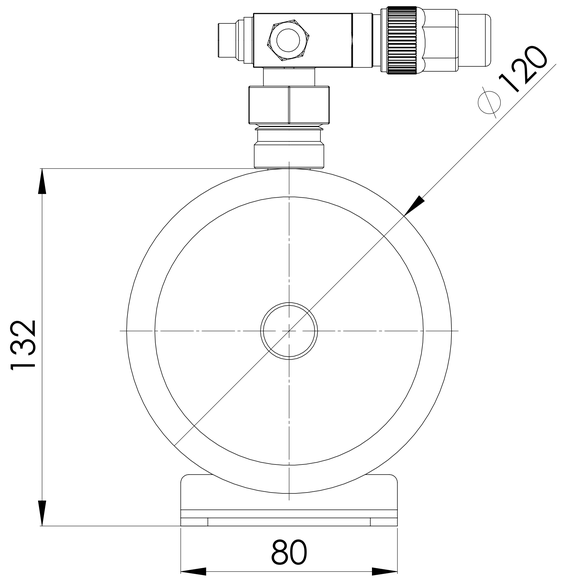

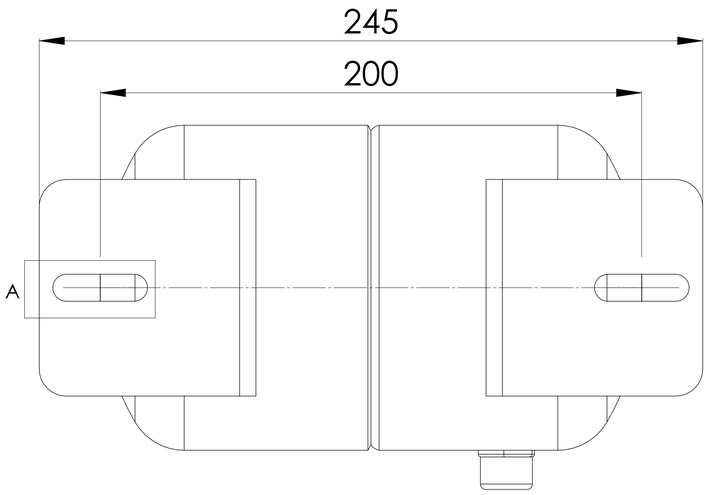

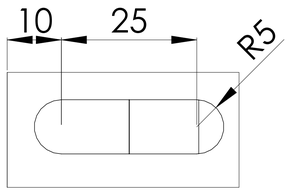

Detail: A

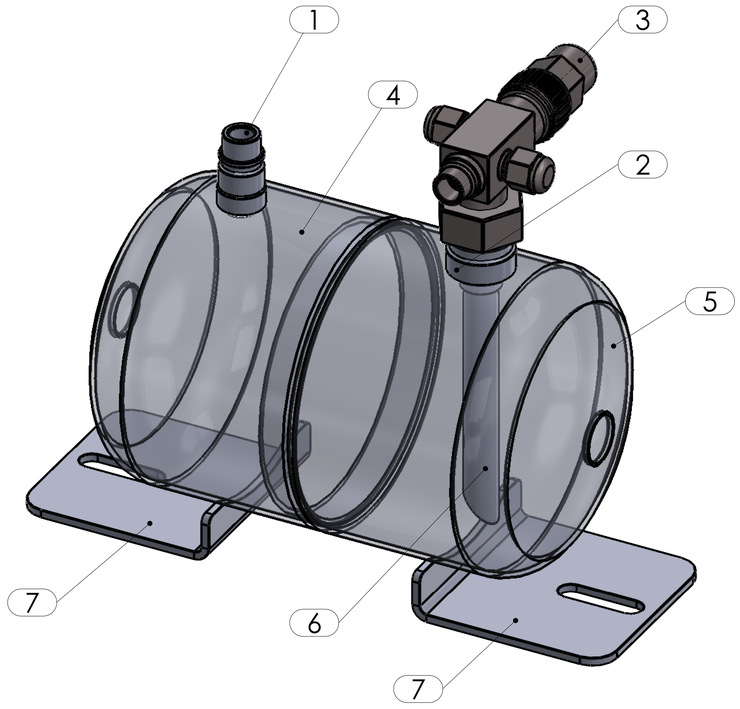

No	Assembly Codes	Qty
1	M002.000002	1

GÜVEN SOĞUTMA
ÜNİTELERİ SAN. VE TİC. A.Ş.

Add.: Hastane Mah. Hadımköy Istanbul Cd. No:78/1
34555, Arnavutköy, İstanbul, TURKEY
Tel: +90 212 771 51 12 - 771 51 13
Fax: +90 212 771 51 10
www.gvn.com.tr

SINCE 1985
REFRIGERATION COMPONENTS

GVN STANDART PRODUCT	**Customer**
HORIZONTAL LIQUID RECEIVER	**Product**
HLR.A.33B.02.B2.C2	**Code**
	Customer Code

DESIGN DATA

Capacity [Lt.]	2 Lt.
Design Pressure [PS]	33 Bar
Pneumatic Test Pressure [PT]	36 Bar
Hydraulic Test Pressure	48 Bar
Design Temperature [TS]	Min.-20C / Max.+130C
Cooler Fluid Type	HFC-CFC-HCFC
Fluid Group	2
Category	CAT I / A
Desing Calculation	EN 14276-1/EN 13445-3
Welded Joint Efficiency	0 .85
Material Group (Shell / Head)	1.2
Testing Group	3b
Corrasion Allowance	0,1 mm
Ndt	10%
Packaging Size & Weight	00*00*00 & 00 Kg.
Drawed By	Ö.TÜRKER
Approved By	D.GÜL
Date	4.01.2023
Color	RAL 5009

MATERIAL DATA

No	Connection	Model	Code	Material	Qty
1	Inlet Connection	ODS 3/8" H:30	106.060.B02.INL.T30	ST44-E275	1
2	Outlet Connection	ROT. 1" H:25	106.060.A02.001.T25	E275-ST44	1
3	Inlet Valve	RV.45b-3/8	C2.RV.45B.01.3-8		1
4	Deep Drawn	Ø120x2 H:100	203.020.002.002.001	EN10111-DD13	1
5	Deep Drawn	Ø120x2 H:100	203.020.001.002.001	EN10111-DD13	1
6	Pipe	Ø13x1 H:108	104.013.010.000.108	E235	1
7	Base Plate	80x80x3	105.001.120.001.001	EN10111-DD13	2

GENERAL NOTES

-Max. allowable operating pressure (PS) according to the temperature range;
1)Allowable operating temperature : min. -20C° / max. +130C° PS1 = 33 Bar
2)Allowable operating temperature : min. -20C° / max. -40C° PS2 = 24 Bar
-Unless otherwise specified dimensions in MM
-Unless otherwise specified do not scale
-Unless otherwise specified tube must be clean&free form burrs inside&outside&suitable for soldering
-Unless otherwise specified do not scale indicated thickness are min. after forming or machining
-Unless otherwise specified dimension tolerances according to EN 113445-4

REVISIONS

No	Details Of Change	Date	By
01	33 BAR YAPILDI	16.07.2024	M.AKKAŞ
02	STANDART TEKNİK RESİM ÖLÇ YAPILDI	12.09.2024	M.AKKAŞ
03	CORRASİON DEĞERİ 0,5MM DEN 0,1MM OLDU	18.11.2024	M.AKKAŞ

RELATED DRAWINGS

No	Description	Drawing No
01		
02		

ISO 9001 2015 CERTIFIED
CE PED 2014 / 68 / EU
EAC CERTIFICATE

We reserve all rights in this document and in the information contained therein.
Reproduction use or disclosure to third parties without express authority is strictly forbidden.