Dimensions

8-12HP(3Ph)

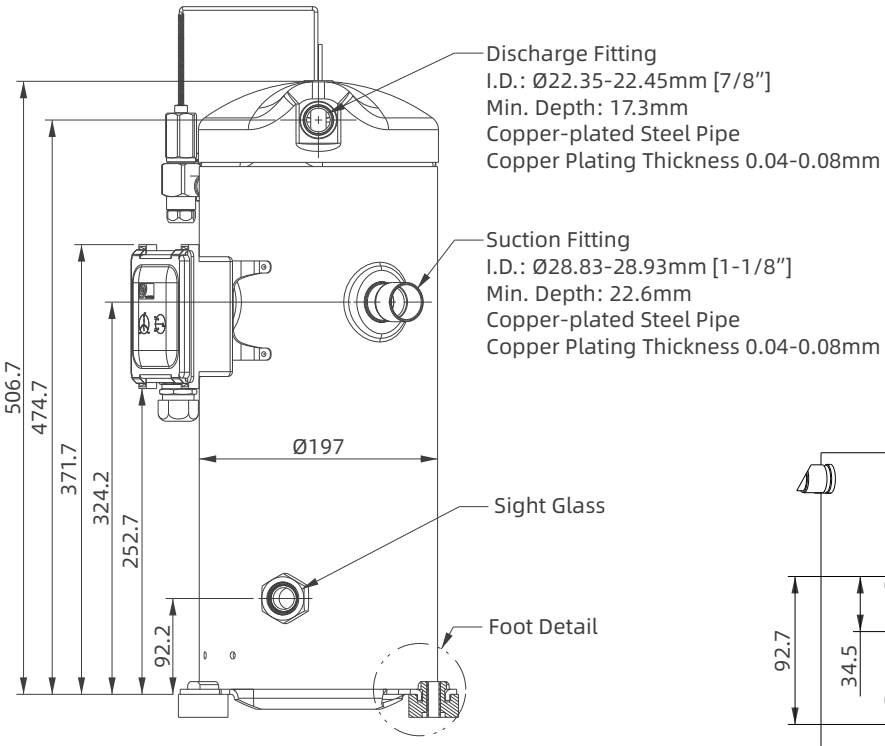

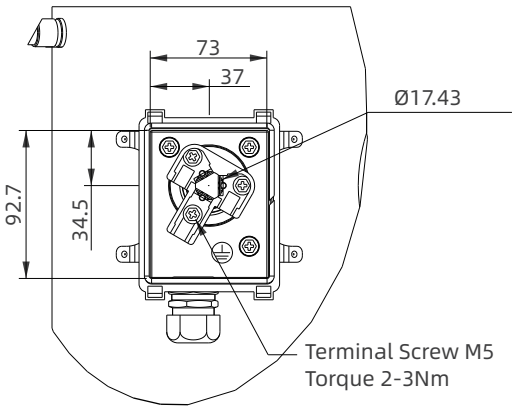

T-Box Layout
View A-A

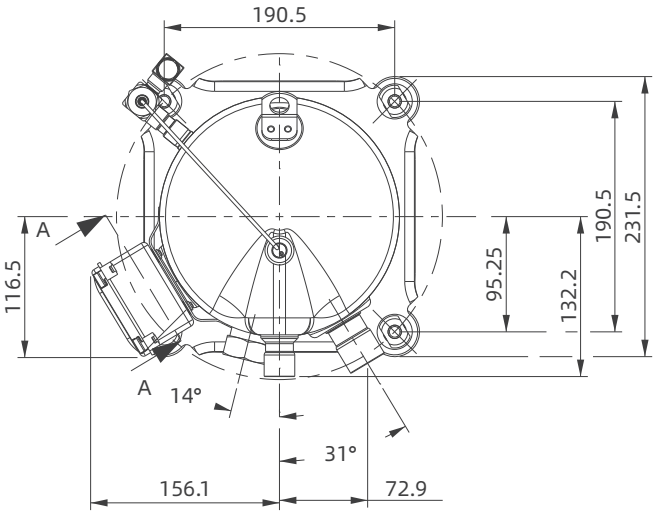

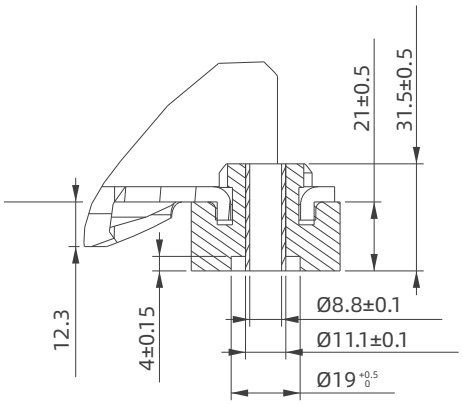

Foot Detail