YH Series

Product Dimensions

20-30 HP

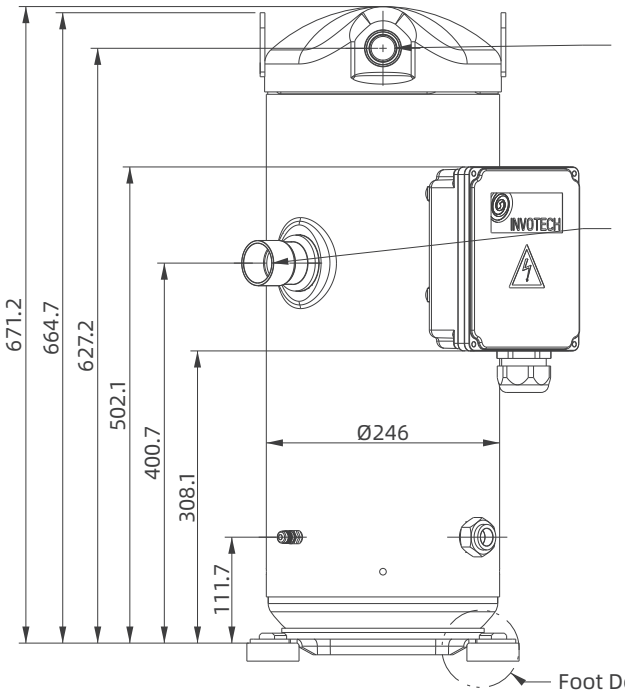

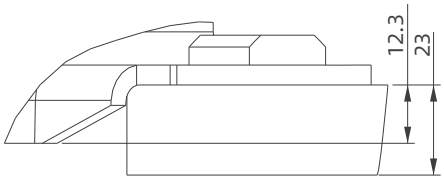

Foot Detail

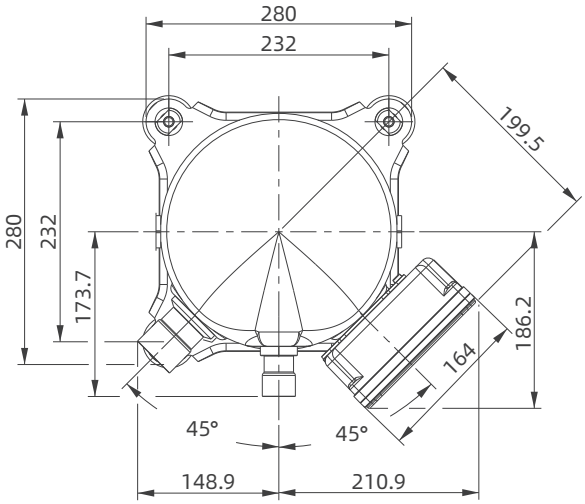

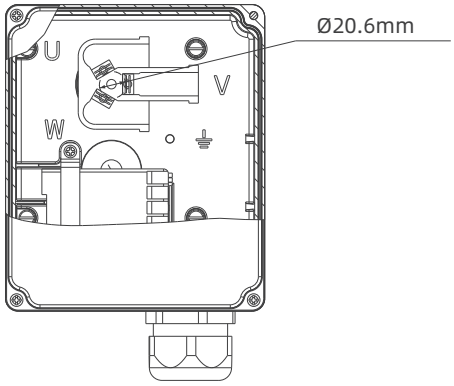

T-Box Layout