YA/YH Series

Product Dimensions

8-12 HP

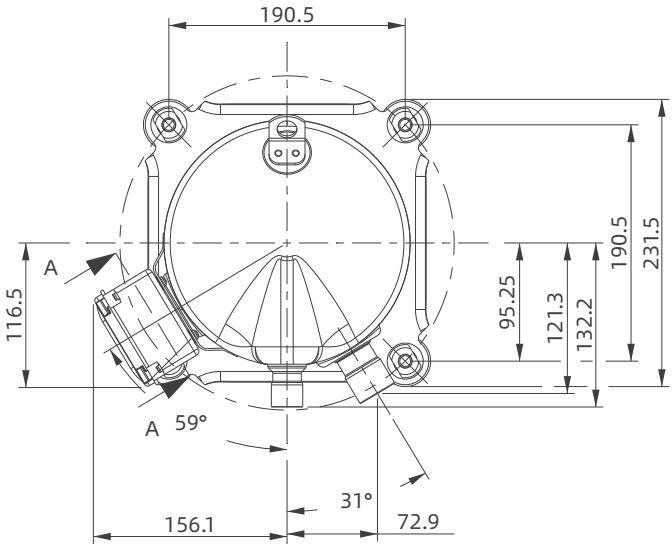

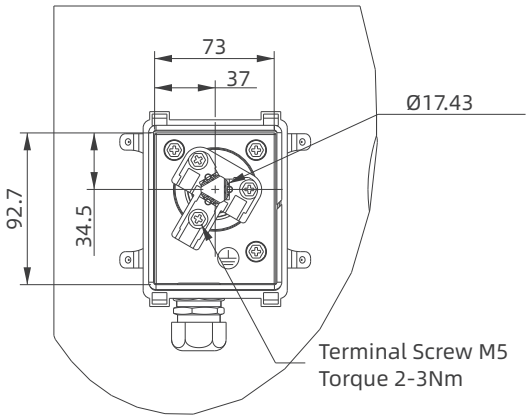

T-Box Layout
View A-A

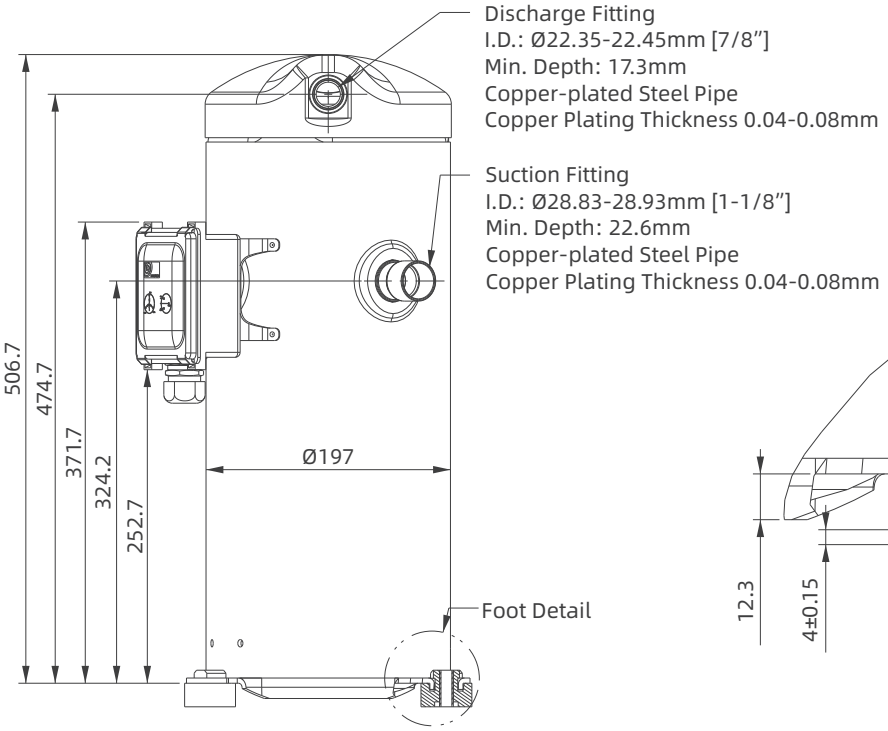

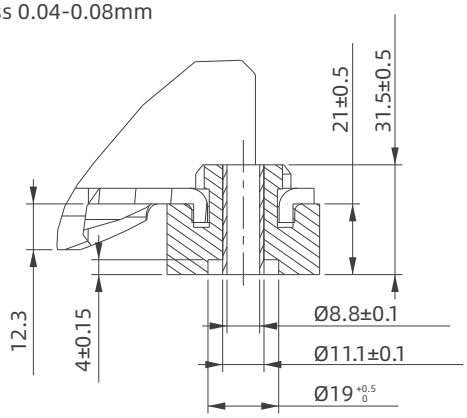

Foot Detail