Dimensions
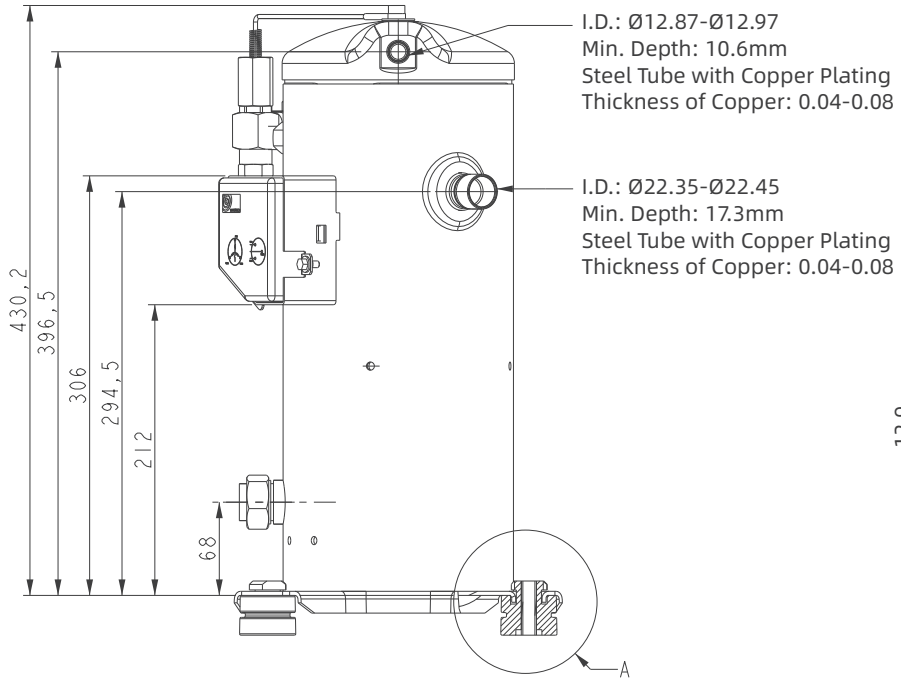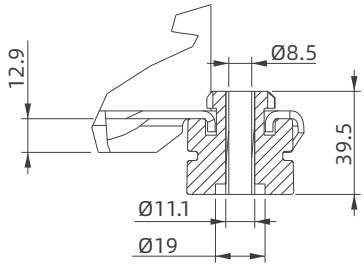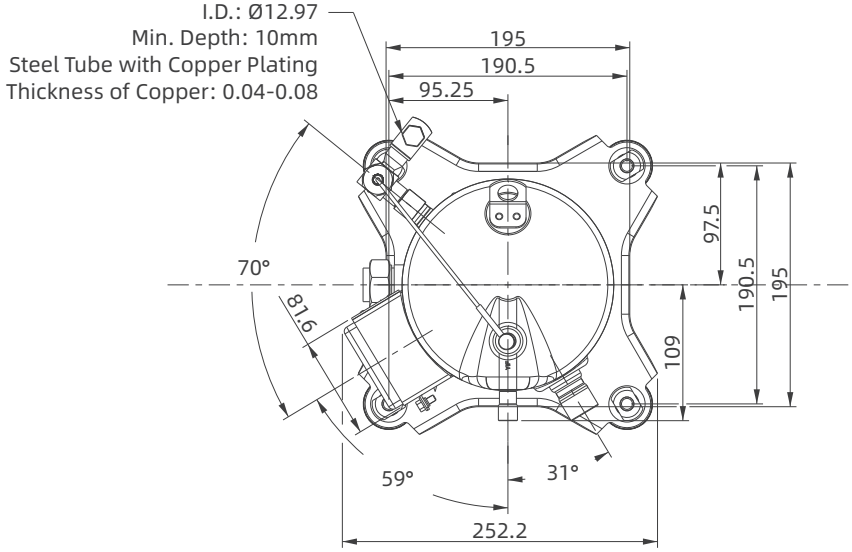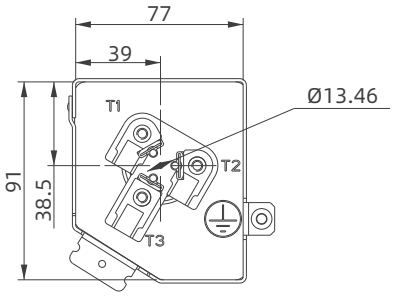
YIF38-72