2214 F/2TDHO

DC axial fan



ebm-papst St. Georgen GmbH & Co. KG
Hermann-Papst-Str. 1
D-78112 St. Georgen
Phone +49 (0) 7724 81-0
Fax +49 (0) 7724 81-1309
info2@de.ebmpapst.com
www.ebmpapst.com

Nominal data

Type	2214 F/2TDHO	
Nominal voltage	VDC	24
Nominal voltage range	VDC	16 .. 30
Speed	min^{-1}	4250
Power input	W	35
Min. ambient temperature	°C	-25
Max. ambient temperature	°C	75
Air flow	m^3/h	790
Sound power level	B	7.1
Sound pressure level	dB(A)	62

ml = Max. load · me = Max. efficiency · fa = Running at free air · cs = Customer specs · cu = Customer unit
Subject to alterations

Technical features

General description	3-phase fan drive with very smooth operation and high efficiency Housing with earthing lug for bolt M4 x 8 (Torx) * Free air power consumption, these values may be considerably higher at the operating point.
Impeller material	Fibreglass-reinforced plastic (PA)
Mass	1.0 kg
Dimensions	220 x 200 x 51 mm
Housing material	Die-cast aluminium
Direction of air flow	Air exhaust over bars
Direction of rotation	Counter-clockwise, looking at rotor
Bearing	Ball bearing
Lifetime L10 at 40 °C	90000 h
Lifetime L10 at maximum temperature	42500 h
Connection line	Via single strands AWG 18, 20 or AWG 22, TR 64, speed signal and control input AWG 22

ebm-papst St. Georgen GmbH & Co. KG · Hermann-Papst-Str. 1 · D-78112 St. Georgen · Phone +49 (0) 7724 81-0 · Fax +49 (0) 7724 81-1309 · info2@de.ebmpapst.com · www.ebmpapst.com

DC axial fan

Product drawing

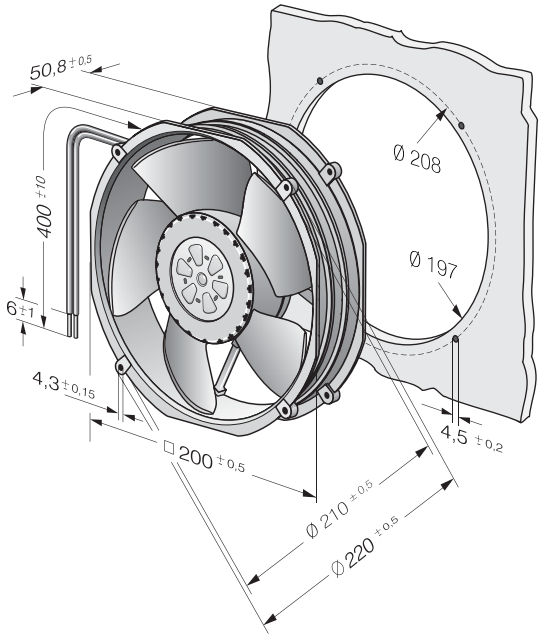

ebm-papst St. Georgen GmbH & Co. KG · Hermann-Papst-Str. 1 · D-78112 St. Georgen · Phone +49 (0) 7724 81-0 · Fax +49 (0) 7724 81-1309 · info2@de.ebmpapst.com · www.ebmpapst.com

DC axial fan

Charts

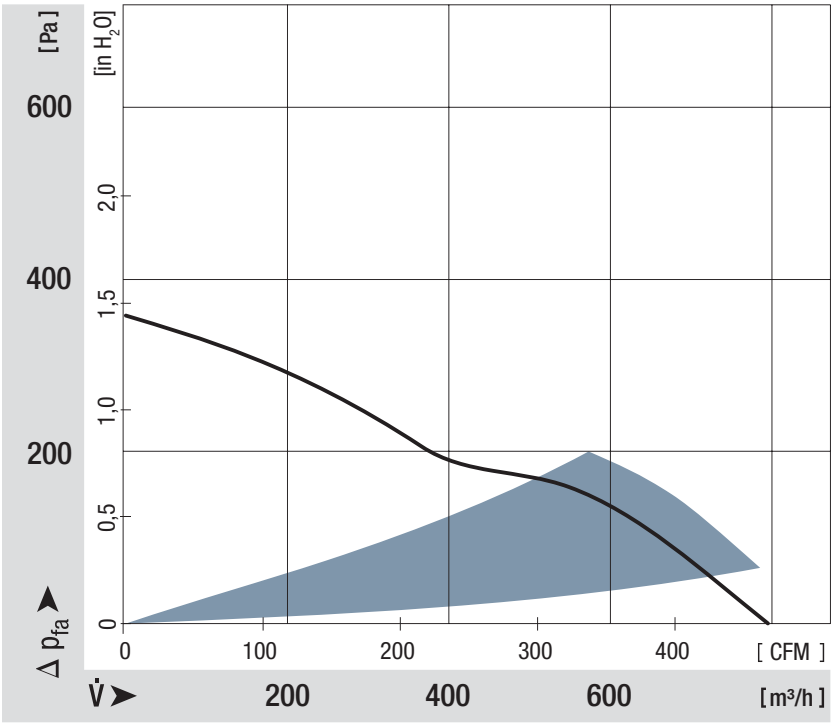

ebm-papst St. Georgen GmbH & Co. KG · Hermann-Papst-Str. 1 · D-78112 St. Georgen · Phone +49 (0) 7724 81-0 · Fax +49 (0) 7724 81-1309 · info2@de.ebmpapst.com · www.ebmpapst.com