2218 F/2TDHHO

DC axial fan



ebm-papst St. Georgen GmbH & Co. KG
Hermann-Papst-Straße 1
D-78112 St. Georgen
Phone +49 7724 81-0
Fax +49 7724 81-1309
info2@de.ebmpapst.com
www.ebmpapst.com

Nominal data

Type	2218 F/2TDHHO	
Nominal voltage	VDC	48
Nominal voltage range	VDC	36 .. 72
Speed	min^{-1}	5000
Power input	W	48
Min. ambient temperature	°C	-25
Max. ambient temperature	°C	70
Air flow	m^3/h	940
Sound power level	B	7.4
Sound pressure level	dB(A)	66

ml = max. load · me = max. efficiency · rfa = running at free air · cs = customer specs · cu = customer unit
Subject to alterations

DC axial fan

Technical features

General description	Particular design features: Very high-performance 200 mm fan with compact overall height. Low operating noise level at high counterpressure. Very smooth running 3-phase fan drive with high efficiency. Standard models available with tach output and PWM control input (P) or 0-10VDC / PWM control input (O). General features: Materials: Housing made of aluminium, impeller made of fibreglass-reinforced PA; housing with grounding lug for M4 x 8 screw. Electronic commutation completely integrated. Protected against reverse polarity and locking. El. connection via single strands AWG 20, UL 1007 / AWG 22, UL 1061, bared and tin-plated. Air exhaust over bars. Direction of rotation counter-clockwise seen on rotor. Mass: 1000 g.
Mass	1.0 kg
Dimensions	220 x 200 x 51 mm
Lifetime L10 at 40 °C	85000 h
Lifetime L10 at maximum temperature	42500 h

ebm-papst St. Georgen GmbH & Co. KG · Hermann-Papst-Straße 1 · D-78112 St. Georgen · Phone +49 7724 81-0 · Fax +49 7724 81-1309 · info2@de.ebmpapst.com · www.ebmpapst.com

Product drawing

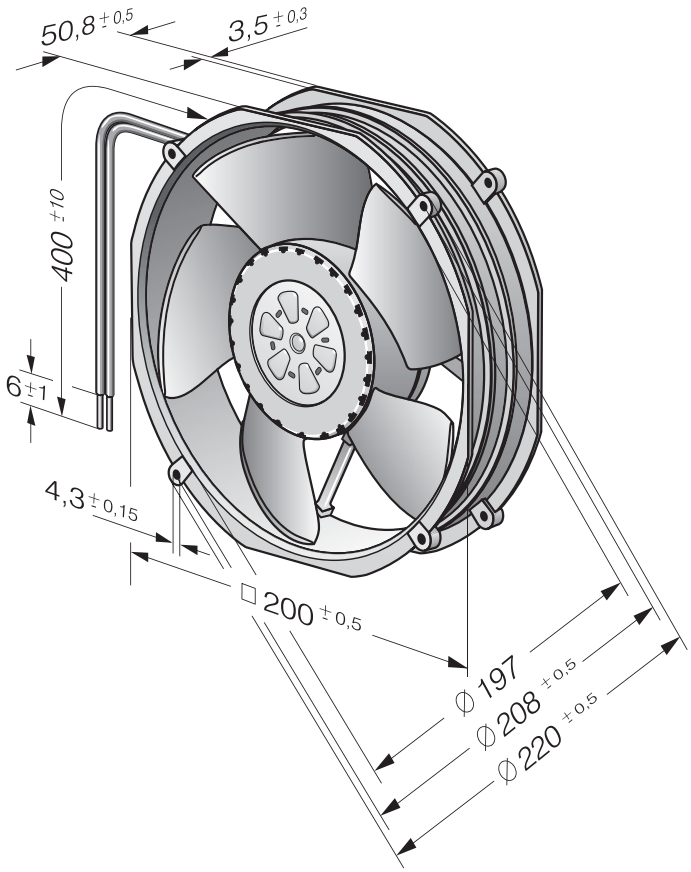

ebm-papst St. Georgen GmbH & Co. KG · Hermann-Papst-Straße 1 · D-78112 St. Georgen · Phone +49 7724 81-0 · Fax +49 7724 81-1309 · info2@de.ebmpapst.com · www.ebmpapst.com

DC axial fan

Charts

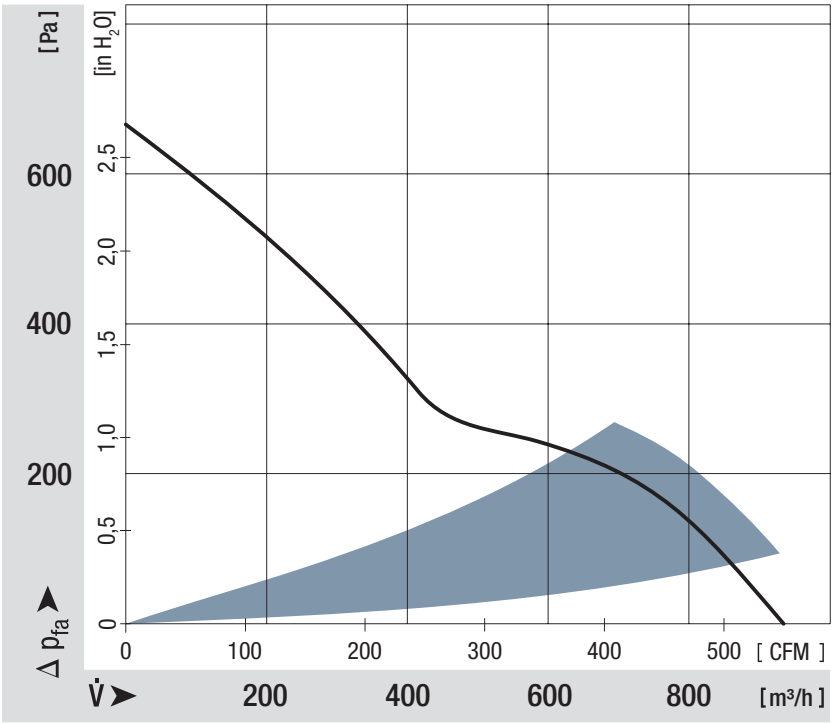

ebm-papst St. Georgen GmbH & Co. KG · Hermann-Papst-Straße 1 · D-78112 St. Georgen · Phone +49 7724 81-0 · Fax +49 7724 81-1309 · info2@de.ebmpapst.com · www.ebmpapst.com