3218 JN

DC axial compact fan



ebm-papst St. Georgen GmbH & Co. KG
Hermann-Papst-Str. 1
D-78112 St. Georgen
Phone +49 (0) 7724 81-0
Fax +49 (0) 7724 81-1309
info2@de.ebmpapst.com
www.ebmpapst.com

Nominal data

Type	3218 JN	
Nominal voltage	VDC	48
Nominal voltage range	VDC	36 .. 56
Speed	min-1	6000
Power input	W	7.0
Min. ambient temperature	°C	-20
Max. ambient temperature	°C	70
Air flow	m3/h	130
Sound power level	B	6.1
Sound pressure level	dB(A)	51

ml = Max. load · me = Max. efficiency · fa = Running at free air · cs = Customer specs · cu = Customer unit
Subject to alterations

DC axial compact fan

Technical features

General description	* Free air power consumption, these values may be considerably higher at the operating point.
Housing material	Fibreglass-reinforced plastic (PBT)
Impeller material	Fibreglass-reinforced plastic (PA)
Mass	0.240 kg
Dimensions	92 x 92 x 38 mm
Direction of air flow	Air exhaust over bars
Direction of rotation	Right, looking at rotor
Bearing	Ball bearings
Lifetime L10 at 40 °C	70000 h
Lifetime L10 at maximum temperature	35000 h
Connection line	Single strands AWG 24, TR 64, bared and tin-plated.
Motor protection	Protected against reverse polarity and locking.
Approval	VDE, CSA, UL

ebm-papst St. Georgen GmbH & Co. KG · Hermann-Papst-Str. 1 · D-78112 St. Georgen · Phone +49 (0) 7724 81-0 · Fax +49 (0) 7724 81-1309 · info2@de.ebmpapst.com · www.ebmpapst.com

DC axial compact fan

Product drawing

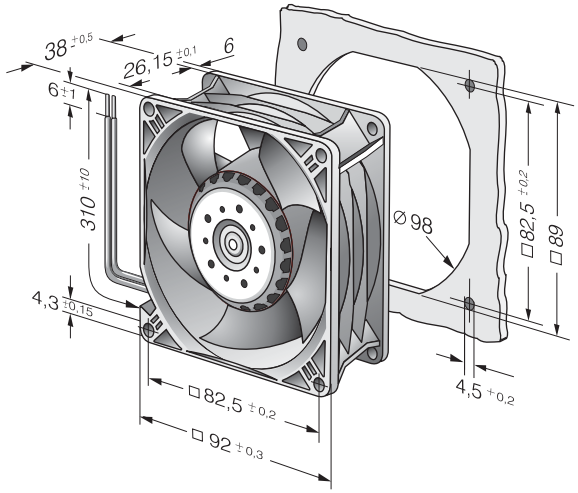

ebm-papst St. Georgen GmbH & Co. KG · Hermann-Papst-Str. 1 · D-78112 St. Georgen · Phone +49 (0) 7724 81-0 · Fax +49 (0) 7724 81-1309 · info2@de.ebmpapst.com · www.ebmpapst.com

DC axial compact fan

Charts: Air flow

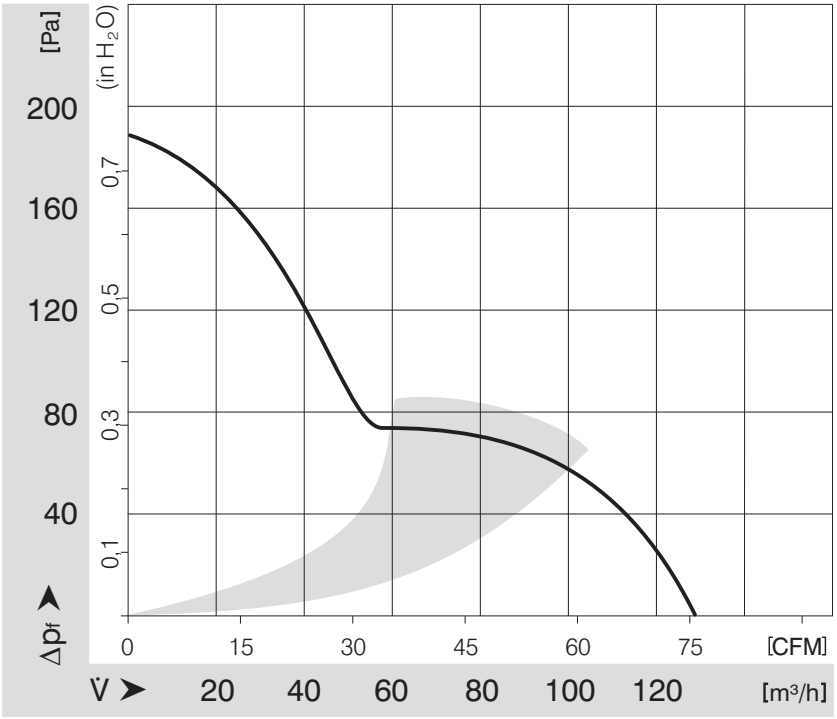

ebm-papst St. Georgen GmbH & Co. KG · Hermann-Papst-Str. 1 · D-78112 St. Georgen · Phone +49 (0) 7724 81-0 · Fax +49 (0) 7724 81-1309 · info2@de.ebmpapst.com · www.ebmpapst.com