3258 J/2 HHP

DC axial fan



ebm-papst St. Georgen GmbH & Co. KG
Hermann-Papst-Str. 1
D-78112 St. Georgen
Phone +49 (0) 7724 81-0
Fax +49 (0) 7724 81-1309
info2@de.ebmpapst.com
www.ebmpapst.com

Nominal data

Type	3258 J/2 HHP	
Nominal voltage	VDC	48
Nominal voltage range	VDC	36 .. 56
Speed	min^{-1}	6650
Power input	W	24.3
Min. ambient temperature	°C	-20
Max. ambient temperature	°C	70
Air flow	m^3/h	235
Sound power level	B	7.0
Sound pressure level	dB(A)	59

ml = Max. load · me = Max. efficiency · fa = Running at free air · cs = Customer specs · cu = Customer unit
Subject to alterations

Technical features

General description	* Free air power consumption, these values may be considerably higher at the operating point.
Mass	0.24 kg
Dimensions	92 x 92 x 38 mm
Material of impeller	Fibreglass-reinforced plastic (PA)
Housing material	Fibreglass-reinforced plastic (PBT)
Direction of air flow	Air exhaust over bars
Direction of rotation	Clockwise, looking at rotor
Bearing	Ball bearing
Lifetime L10 at 40 °C	90.000 h
Lifetime L10 at maximum temperature	45.000 h
Connection line	With single strands AWG 22, TR 64
Approval	VDE, CSA, UL

ebm-papst St. Georgen GmbH & Co. KG · Hermann-Papst-Str. 1 · D-78112 St. Georgen · Phone +49 (0) 7724 81-0 · Fax +49 (0) 7724 81-1309 · info2@de.ebmpapst.com · www.ebmpapst.com

DC axial fan

Product drawing

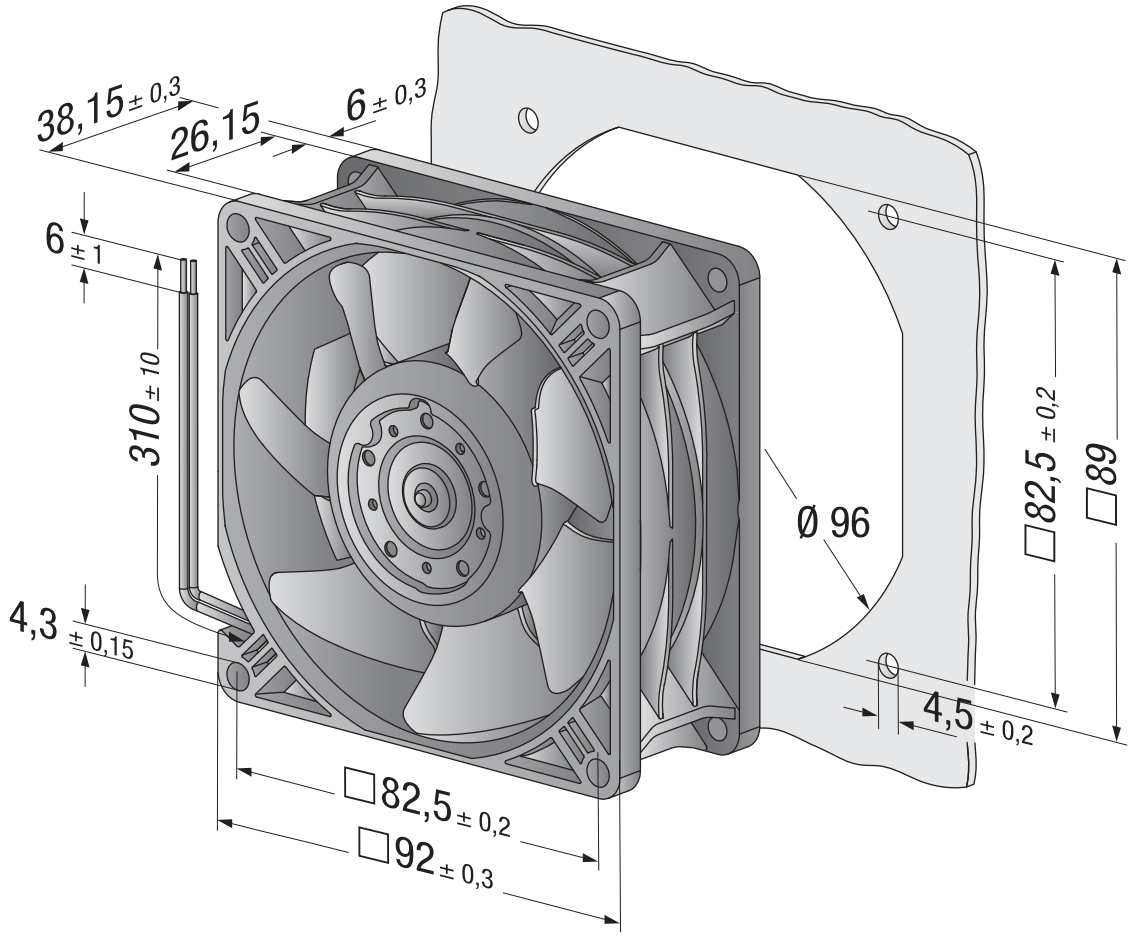

ebm-papst St. Georgen GmbH & Co. KG · Hermann-Papst-Str. 1 · D-78112 St. Georgen · Phone +49 (0) 7724 81-0 · Fax +49 (0) 7724 81-1309 · info2@de.ebmpapst.com · www.ebmpapst.com

DC axial fan

Charts

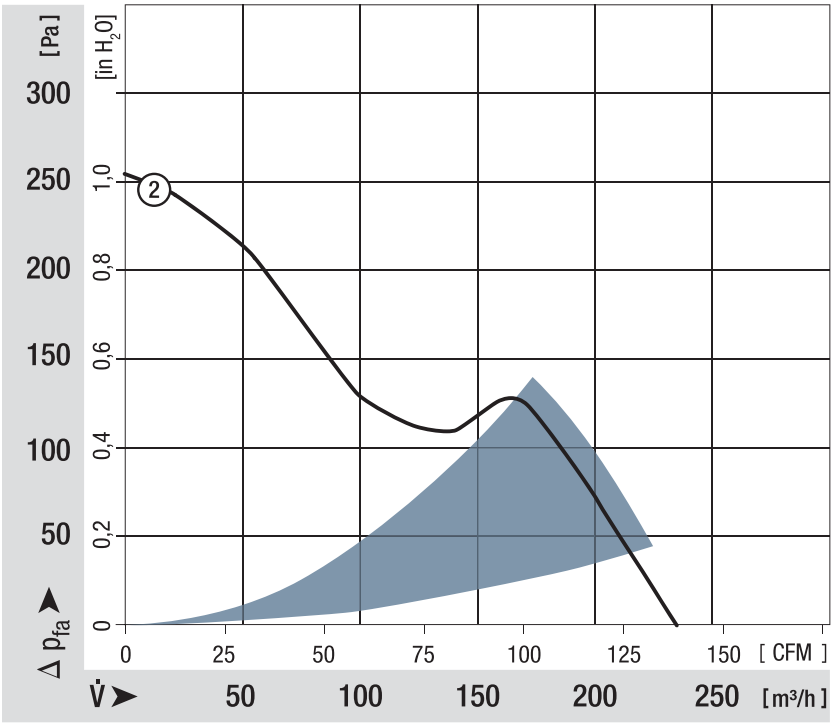

ebm-papst St. Georgen GmbH & Co. KG · Hermann-Papst-Str. 1 · D-78112 St. Georgen · Phone +49 (0) 7724 81-0 · Fax +49 (0) 7724 81-1309 · info2@de.ebmpapst.com · www.ebmpapst.com