AC axial compact fan



ebm-papst St. Georgen GmbH & Co. KG
Hermann-Papst-Straße 1
D-78112 St. Georgen
Phone +49 7724 81-0
Fax +49 7724 81-1309
info2@de.ebmpapst.com
www.ebmpapst.com

Nominal data

Type	3650	
Nominal voltage	VAC	230
Frequency	Hz	50
Speed	min^{-1}	2650
Power input	W	12.0
Min. ambient temperature	°C	-10
Max. ambient temperature	°C	55
Air flow	m^3/h	75
Sound power level	B	4.8
Sound pressure level	dB(A)	36

ml = max. load · me = max. efficiency · rfa = running at free air · cs = customer specs · cu = customer unit
Subject to alterations

AC axial compact fan

Technical features

Dimensions	92 x 92 x 38 mm
General description	AC voltage fan with external rotor shaded-pole motor. Protected from overload by impedance protection. Fan housing and fan impeller made of metal. Air exhaust over bars. Rotational direction clockwise looking at rotor. Electrical connection to 2 single strands. Strand ends bared and tin-plated. Fan housing with grounding lug and tapping screw M4 x 8 (TORX). Mass 420 g. Please note our new ACmaxx series. With identical fastening dimensions and voltages, this series achieves higher energy efficiency.
Connection line	2 single strands AWG 18, TR 64
Direction of rotation	Right, looking at rotor
Direction of air flow	Air exhaust over bars
Bearing	Sintec sleeve bearing system
Lifetime L10 at 40 °C	52500 h
Lifetime L10 at maximum temperature	37500 h
Mass	0.420 kg
Housing material	Metal
Material of impeller	Metal
Motor protection	Protected from overload using impedance protection
Approval	VDE, CSA, UL, CE

ebm-papst St. Georgen GmbH & Co. KG · Hermann-Papst-Straße 1 · D-78112 St. Georgen · Phone +49 7724 81-0 · Fax +49 7724 81-1309 · info2@de.ebmpapst.com · www.ebmpapst.com

AC axial compact fan

Product drawing

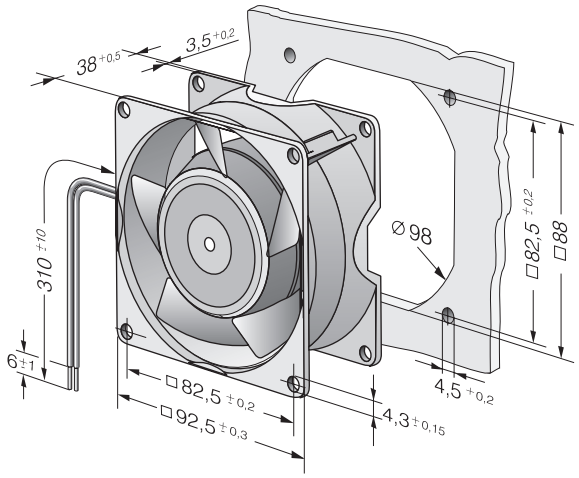

ebm-papst St. Georgen GmbH & Co. KG · Hermann-Papst-Straße 1 · D-78112 St. Georgen · Phone +49 7724 81-0 · Fax +49 7724 81-1309 · info2@de.ebmpapst.com · www.ebmpapst.com

AC axial compact fan

Charts: Air flow

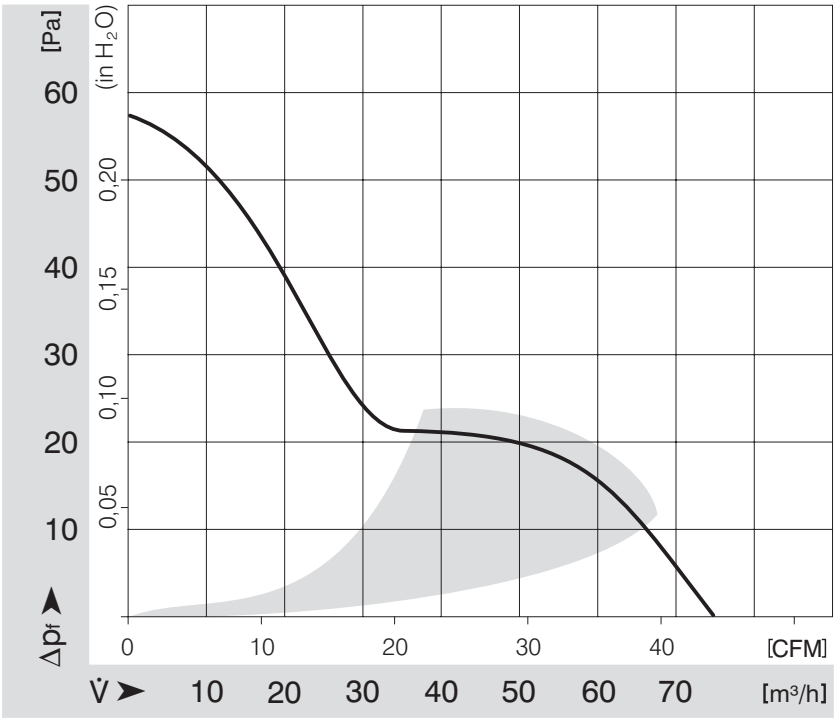

ebm-papst St. Georgen GmbH & Co. KG · Hermann-Papst-Straße 1 · D-78112 St. Georgen · Phone +49 7724 81-0 · Fax +49 7724 81-1309 · info2@de.ebmpapst.com · www.ebmpapst.com