DC axial compact fan



ebm-papst St. Georgen GmbH & Co. KG
Hermann-Papst-Straße 1
D-78112 St. Georgen
Phone: +49(0)7724/81-0
Fax: +49(0)7724/81-1309
info2@de.ebmpapst.com
www.ebmpapst.com

Nominal data

Type	4314	
Nominal voltage	VDC	24
Nominal voltage range	VDC	12 .. 28
Speed	min^{-1}	2800
Power input	W	5.0
Min. ambient temperature	°C	-20
Max. ambient temperature	°C	75
Air flow	m^3/h	170
Sound power level	B	5.8
Sound pressure level	dB(A)	45

ml = max. load · me = max. efficiency · rfa = running at free air · cs = customer specs · cu = customer unit
Subject to alterations

DC axial compact fan

Technical features

Dimensions	119 x 119 x 32 mm
General description	Optional Vario-Pro: Highly flexible software configuration for the fan ensures an easily customizable solution to meet the individual requirements of your application. Electronic commutation completely integrated.
Connection line	Single strands AWG 22, TR 64, bared and tin-plated.
Locked-rotor protection	Blocking and overload protection
Direction of rotation	Right, looking at rotor
Direction of air flow	Air exhaust over bars
Bearing	Ball bearings
Lifetime L10 at 40 °C	62500 h
Lifetime L10 at maximum temperature	27500 h
Mass	0.220 kg
Housing material	Fiberglass-reinforced PBT plastic
Material of impeller	Fiberglass-reinforced PA plastic
Motor protection	Protected against reverse polarity and locking.
Approval	VDE, CSA, UL, CE

ebm-papst St. Georgen GmbH & Co. KG · Hermann-Papst-Straße 1 · D-78112 St. Georgen · Phone: +49(0)7724/81-0 · Fax: +49(0)7724/81-1309 · info2@de.ebmpapst.com · www.ebmpapst.com

DC axial compact fan

Product drawing

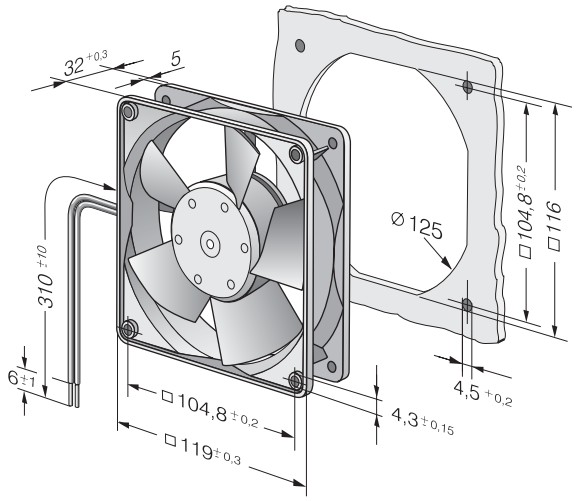

ebm-papst St. Georgen GmbH & Co. KG · Hermann-Papst-Straße 1 · D-78112 St. Georgen · Phone: +49(0)7724/81-0 · Fax: +49(0)7724/81-1309 · info2@de.ebmpapst.com · www.ebmpapst.com

DC axial compact fan

Charts: Air flow

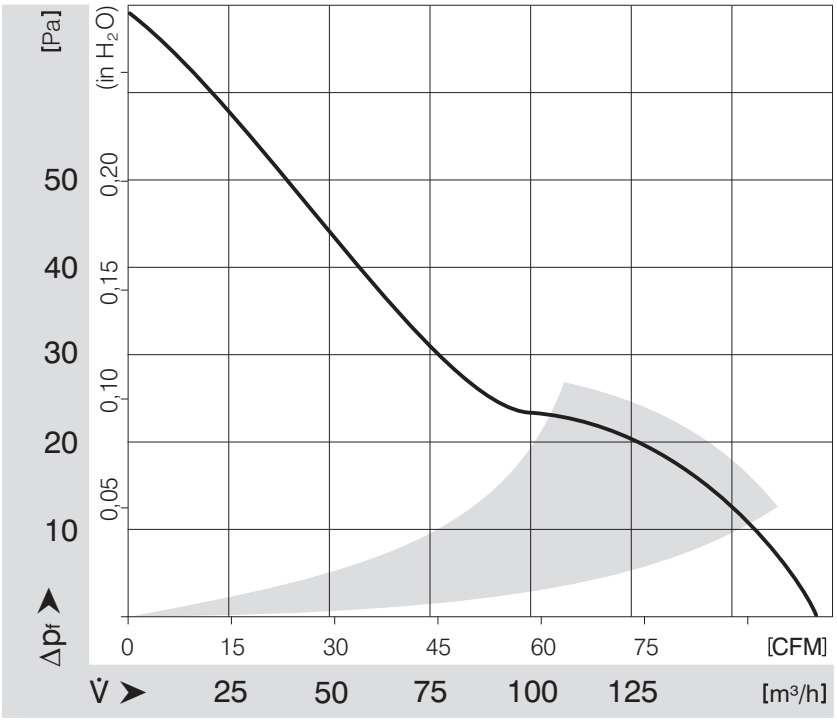

ebm-papst St. Georgen GmbH & Co. KG · Hermann-Papst-Straße 1 · D-78112 St. Georgen · Phone: +49(0)7724/81-0 · Fax: +49(0)7724/81-1309 · info2@de.ebmpapst.com · www.ebmpapst.com