**4656 TZ**

# AC axial compact fan



**ebm-papst St. Georgen GmbH & Co. KG**
Hermann-Papst-Straße 1
D-78112 St. Georgen
Phone: +49(0)7724/81-0
Fax: +49(0)7724/81-1309
info2@de.ebmpapst.com
www.ebmpapst.com

## Nominal data

| Type | 4656 TZ | |
|---|---|---|
| Phase | | 1~ |
| Nominal voltage | VAC | 230 |
| Frequency | Hz | 50 |
| Speed | $min^{-1}$ | 2600 |
| Power input | W | 19.0 |
| Min. ambient temperature | °C | -40 |
| Max. ambient temperature | °C | 65 |
| Air flow | $m^3/h$ | 125 |
| Sound pressure level | dB(A) | 42 |

ml = max. load · me = max. efficiency · rfa = running at free air · cs = customer specs · cu = customer unit
Subject to alterations

# AC axial compact fan

## Technical features

| | |
|---|---|
| **Dimensions** | 108 Ø x 37 mm |
| **General description** | AC fan with external rotor shaded-pole motor. |
| **Connection line** | 2 single strands AWG 18 |
| **Direction of rotation** | Right, looking at rotor |
| **Direction of air flow** | Air exhaust over mounting bracket |
| **Bearing** | Ball bearings |
| **Lifetime L10 at 40 °C** | 37500 h |
| **Lifetime L10 at maximum temperature** | 20000 h |
| **Mass** | 0.430 kg |
| **Material of impeller** | Metal |
| **Motor protection** | Protected from overload using impedance protection |
| **Approval** | VDE, CSA, UL, CE |



ebm-papst St. Georgen GmbH & Co. KG · Hermann-Papst-Straße 1 · D-78112 St. Georgen · Phone: +49(0)7724/81-0 · Fax: +49(0)7724/81-1309 · info2@de.ebmpapst.com · www.ebmpapst.com

# AC axial compact fan

## Product drawing

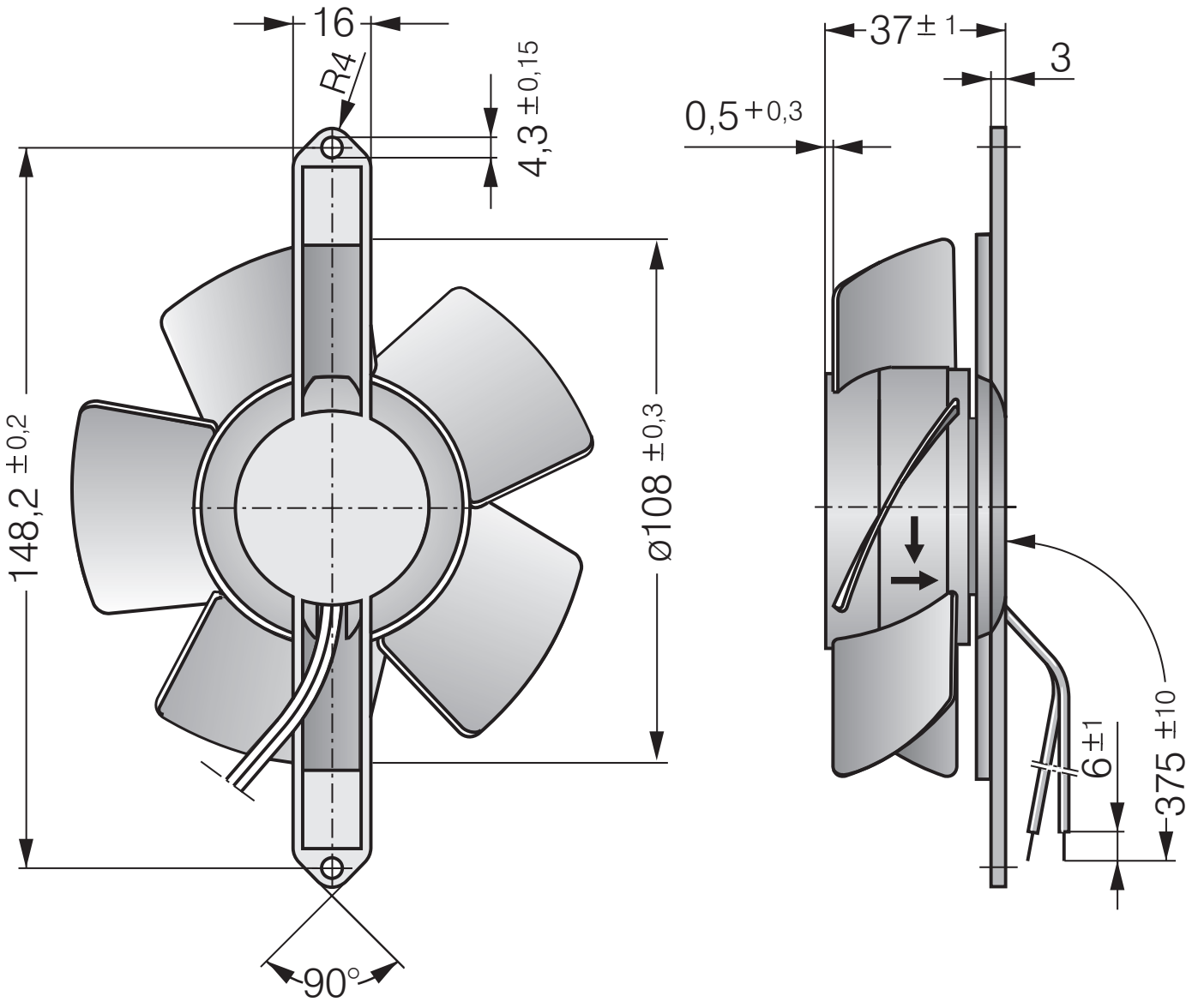




ebm-papst St. Georgen GmbH & Co. KG · Hermann-Papst-Straße 1 · D-78112 St. Georgen · Phone: +49(0)7724/81-0 · Fax: +49(0)7724/81-1309 · info2@de.ebmpapst.com · www.ebmpapst.com