max. 33 m^3/h

DC axial fans

Series 600 F 60 x 60 x 15 mm

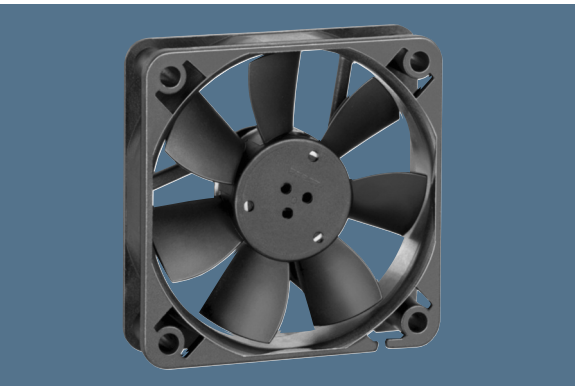

Highlights:
- Compact fan with low power consumption.
- Some models suitable for use at high ambient temperatures.

General characteristics:
- Material: fibreglass-reinforced plastic. Impeller PA, housing PBT.
- Fully integrated electronic commutation.
- Protected against reverse polarity and locking.
- Connection via single strands AWG 28, TR 64. Bared and tin-plated.
- Air exhaust over struts. Direction of rotation counter-clockwise, seen on rotor.
- Mass: 30 g.

Nominal data	Air flow	Air flow	Nominal voltage	Voltage range	Sound pressure level	Sound power level	Sintec sleeve bearings □ / Ball bearings ■	Power input	Nominal speed	Temperature range	Service life L_{10} (20 °C) ebm-papst Standard	Service life L_{10} (60 °C) ebm-papst Standard	Life expectancy $L_{10\Delta}$ (40 °C) see P. 15	Curve	Specials
Type	**m^3/h**	**CFM**	**VDC**	**VDC**	**dB(A)**	**Bel(A)**	□ / ■	**Watts**	**RPM**	**°C**	**Hours**		**Hours**	**P. 110/118**	
605 F	29	17,1	**5**	4,5...5,2	27	4,4	□	1,1	4 000	-20...+50	50 000 / 20 000		50 000	2	/2
612 FL	19	11,2	**12**	11,5...13,2	16	3,6	□	0,4	2 650	0...+70	50 000 / 20 000		62 500	1	
612 F	29	17,1	**12**	10,8...13,2	27	4,4	□	1,0	3 900	-20...+70	50 000 / 20 000		62 500	2	/2
612 FH	33	19,4	**12**	10,0...13,2	31	4,8	□	1,4	4 500	-20...+60	45 000 / 15 000		47 500	3	/2/39
614 F	29	17,1	**24**	21,6...26,4	27	4,4	□	1,1	3 900	-20...+70	50 000 / 20 000		62 500	2	/2
Models with temperature range up to +80 / 85 °C.															
612 FL-680	19	11,2	**12**	11,5...14	16	3,6	□	0,5	2 650	-20...+85	50 000 / 20 000		62 500	1	
612 F-637	29	17,1	**12**	10,8...12,6	27	4,4	□	1,0	3 900	-20...+80	50 000 / 20 000		62 500	2	

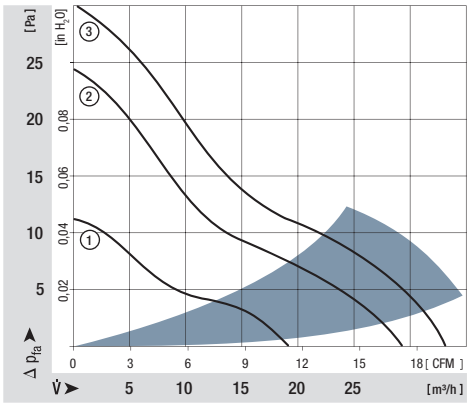

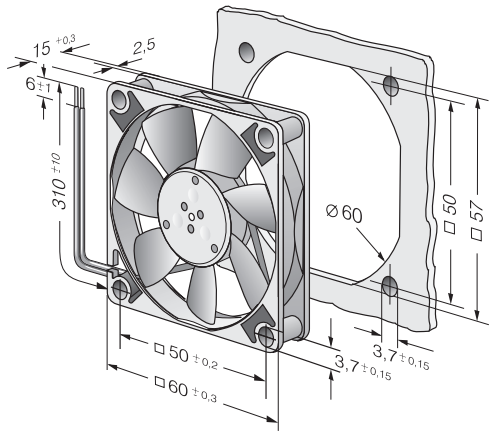

PWM HP

ebmpapst