614 NM

DC axial compact fan



ebm-papst St. Georgen GmbH & Co. KG
Hermann-Papst-Straße 1
D-78112 St. Georgen
Phone +49 7724 81-0
Fax +49 7724 81-1309
info2@de.ebmpapst.com
www.ebmpapst.com

Nominal data

Type	614 NM	
Nominal voltage	VDC	24
Nominal voltage range	VDC	18 .. 28
Speed	min^{-1}	4100
Power input	W	1.4
Min. ambient temperature	°C	-20
Max. ambient temperature	°C	70
Air flow	m^3/h	35
Sound power level	B	4.6
Sound pressure level	dB(A)	28

ml = max. load · me = max. efficiency · fa = running at free air · cs = customer specs · cu = customer unit
Subject to alterations

DC axial compact fan

Technical features

General description	Particular design features: Ball bearings and sleeve bearings available. Some models suitable for use at high ambient temperatures up to 85 °C. General features: Material: fibreglass-reinforced plastic. Impeller PA, housing PBT. Electronic commutation completely integrated. Protected against reverse polarity and locking. Connection via single strands AWG 22, TR 64, bared and tin-plated. Air exhaust over bars. Rotational direction clockwise looking at rotor. Mass: 66 g.
Mass	0.066 kg
Dimensions	60 x 60 x 25 mm
Material of impeller	Fiberglass-reinforced PA plastic
Housing material	Fiberglass-reinforced PBTP plastic
Direction of air flow	Air exhaust over bars
Direction of rotation	Right, looking at rotor
Bearing	Ball bearings
Lifetime L10 at 40 °C	80000 h
Lifetime L10 at maximum temperature	40000 h
Connection line	Single strands AWG 22, TR 64, bared and tin-plated.
Motor protection	Protected against reverse polarity and locking.
Locked-rotor protection	With electronic blocking and overload protection
Approval	VDE, CSA, UL, CE

ebm-papst St. Georgen GmbH & Co. KG · Hermann-Papst-Straße 1 · D-78112 St. Georgen · Phone +49 7724 81-0 · Fax +49 7724 81-1309 · info2@de.ebmpapst.com · www.ebmpapst.com

DC axial compact fan

Product drawing

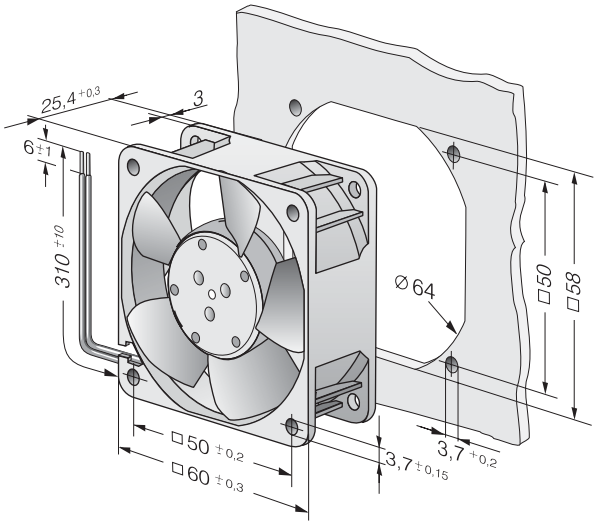

ebm-papst St. Georgen GmbH & Co. KG · Hermann-Papst-Straße 1 · D-78112 St. Georgen · Phone +49 7724 81-0 · Fax +49 7724 81-1309 · info2@de.ebmpapst.com · www.ebmpapst.com

DC axial compact fan

Charts: Air flow

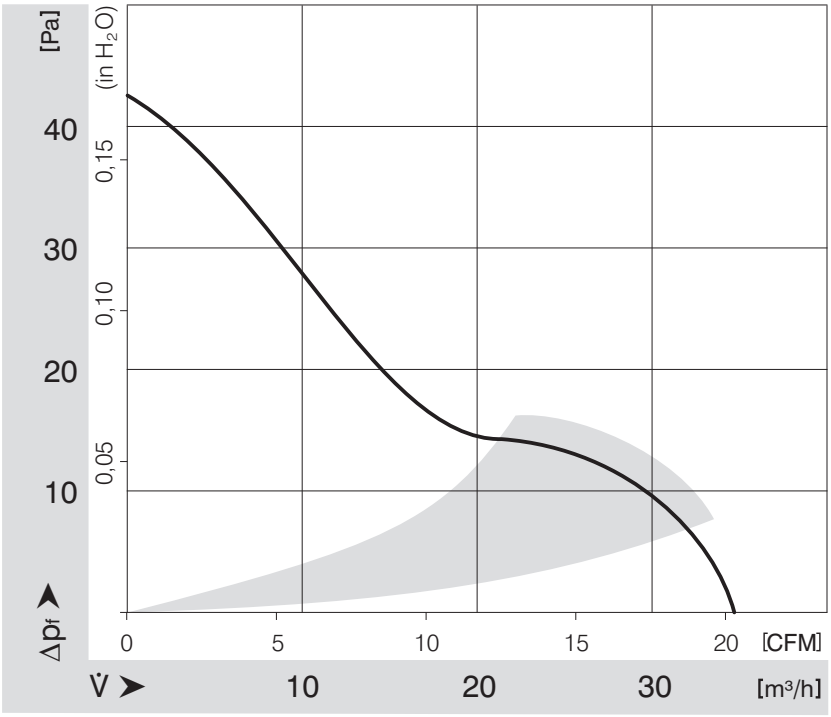

ebm-papst St. Georgen GmbH & Co. KG · Hermann-Papst-Straße 1 · D-78112 St. Georgen · Phone +49 7724 81-0 · Fax +49 7724 81-1309 · info2@de.ebmpapst.com · www.ebmpapst.com