DC axial compact fan



ebm-papst St. Georgen GmbH & Co. KG
Hermann-Papst-Str. 1
D-78112 St. Georgen
Phone +49 (0) 7724 81-0
Fax +49 (0) 7724 81-1309
info2@de.ebmpapst.com
www.ebmpapst.com

Nominal data

Type	6312 /2 TDHP	
Nominal voltage	VDC	12
Nominal voltage range	VDC	8 .. 16
Speed	min-1	5500
Power input	W	40
Min. ambient temperature	°C	-20
Max. ambient temperature	°C	70
Air flow	m3/h	600
Sound power level	B	7.3
Sound pressure level	dB(A)	60

ml = Max. load · me = Max. efficiency · fa = Running at free air · cs = Customer specs · cu = Customer unit
Subject to alterations

Technical features

Impeller material	Fibreglass-reinforced plastic (PA)
Mass	0.910 kg
Dimensions	172 Ø x 51 mm
Housing material	Die-cast aluminium
Direction of air flow	Air exhaust over bars
Direction of rotation	Counterclockwise, looking at rotor
Bearing	Ball bearings
Lifetime L10 at 40 °C	75000 h
Lifetime L10 at maximum temperature	37500 h
Connection line	Via single strands AWG 18, 20 or AWG 22, TR 64, speed signal and control input AWG 22
Motor protection	Protected against reverse polarity and locking.

ebm-papst St. Georgen GmbH & Co. KG · Hermann-Papst-Str. 1 · D-78112 St. Georgen · Phone +49 (0) 7724 81-0 · Fax +49 (0) 7724 81-1309 · info2@de.ebmpapst.com · www.ebmpapst.com

DC axial compact fan

Product drawing

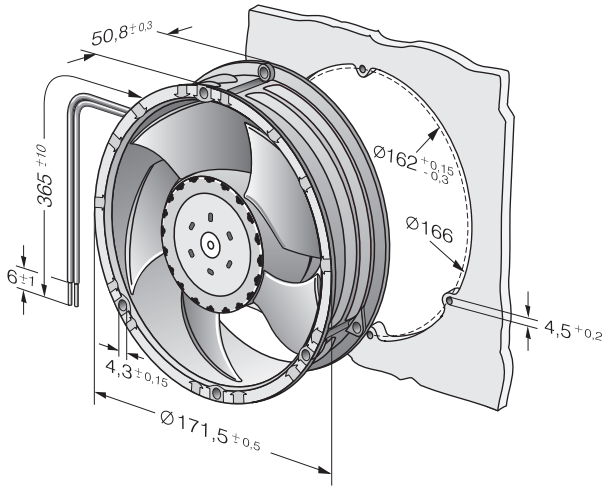

ebm-papst St. Georgen GmbH & Co. KG · Hermann-Papst-Str. 1 · D-78112 St. Georgen · Phone +49 (0) 7724 81-0 · Fax +49 (0) 7724 81-1309 · info2@de.ebmpapst.com · www.ebmpapst.com

DC axial compact fan

Charts

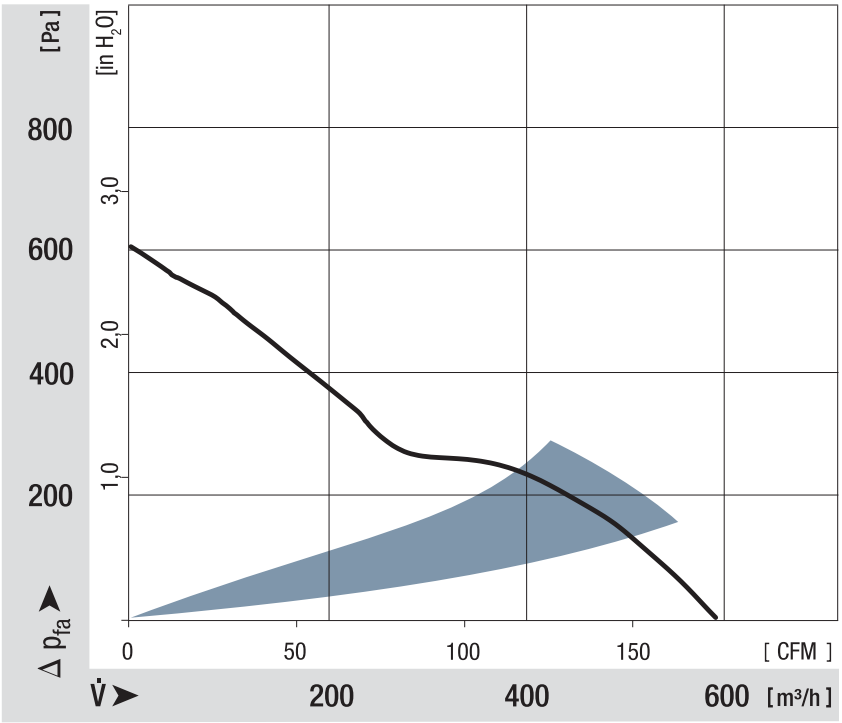

ebm-papst St. Georgen GmbH & Co. KG · Hermann-Papst-Str. 1 · D-78112 St. Georgen · Phone +49 (0) 7724 81-0 · Fax +49 (0) 7724 81-1309 · info2@de.ebmpapst.com · www.ebmpapst.com