DC axial compact fan



ebm-papst St. Georgen GmbH & Co. KG
Hermann-Papst-Straße 1
D-78112 St. Georgen
Phone: +49(0)7724/81-0
Fax: +49(0)7724/81-1309
info2@de.ebmpapst.com
www.ebmpapst.com

Nominal data

Type	8214 JH4	
Nominal voltage	VDC	24
Nominal voltage range	VDC	12 .. 27.6
Speed	min^{-1}	14000
Power input	W	37
Min. ambient temperature	°C	-20
Max. ambient temperature	°C	70
Air flow	m^3/h	222
Sound power level	B	7.8
Sound pressure level	dB(A)	71

ml = max. load · me = max. efficiency · rfa = running at free air · cs = customer specs · cu = customer unit
Subject to alterations

DC axial compact fan

Technical features

Dimensions	80 x 80 x 38 mm
General description	Rigid compression curve for high air flow at high counterpressure. Innovative impeller design with winglets for low noise. Optional Vario-Pro: Highly flexible software configuration for the fan ensures an easily customizable solution to meet the individual requirements of your application. Electronic commutation completely integrated.
Connection line	Single strands AWG 22, TR 64, bared and tin-plated.
Direction of rotation	Left, looking at rotor
Direction of air flow	Air exhaust over bars
Note	Available in standard model with PWM control input and speed signal. Speed control range from 2000 rpm to maximum nominal speed. Standstill at 0% PWM, maximum speed at sensor break.
Bearing	Ball bearings
Lifetime L10 at 40 °C	50000 h
Lifetime L10 at maximum temperature	25000 h
Mass	0.200 kg
Housing material	Fiberglass-reinforced PBT plastic
Material of impeller	Fiberglass-reinforced PA plastic
Motor protection	Protected against reverse polarity and locking.

ebm-papst St. Georgen GmbH & Co. KG · Hermann-Papst-Straße 1 · D-78112 St. Georgen · Phone: +49(0)7724/81-0 · Fax: +49(0)7724/81-1309 · info2@de.ebmpapst.com · www.ebmpapst.com

DC axial compact fan

Product drawing

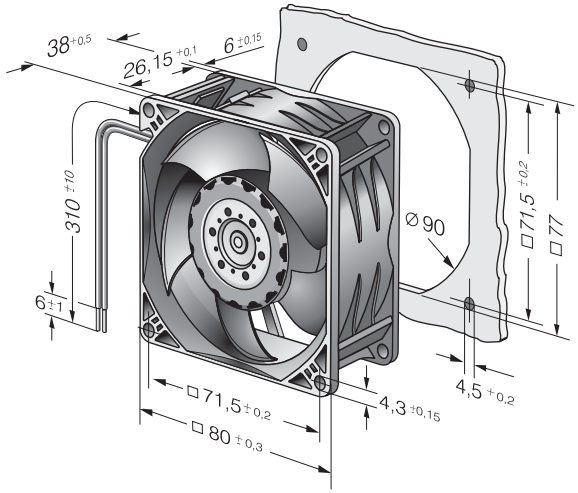

ebm-papst St. Georgen GmbH & Co. KG · Hermann-Papst-Straße 1 · D-78112 St. Georgen · Phone: +49(0)7724/81-0 · Fax: +49(0)7724/81-1309 · info2@de.ebmpapst.com · www.ebmpapst.com

DC axial compact fan

Charts: Air flow

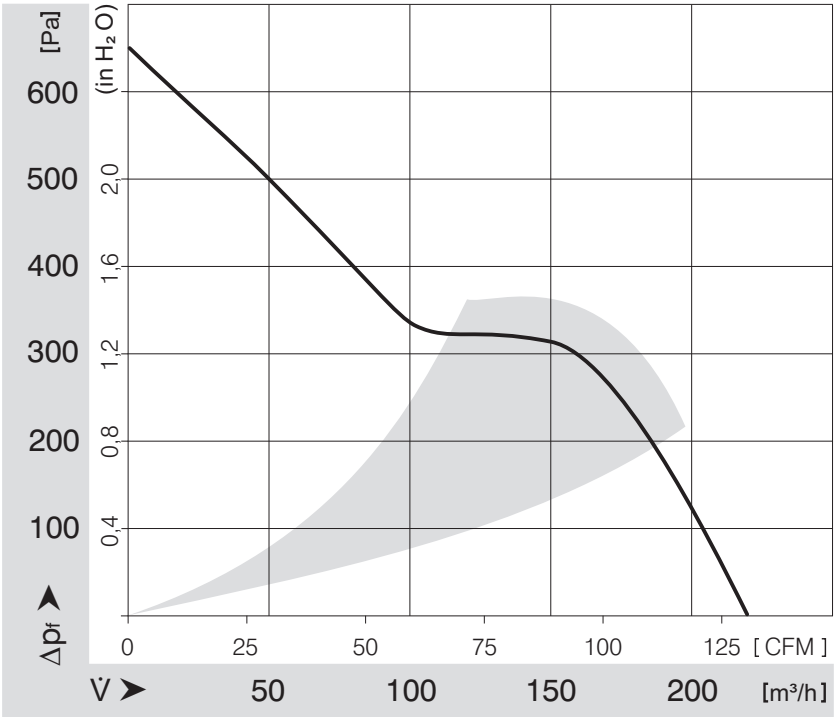

ebm-papst St. Georgen GmbH & Co. KG · Hermann-Papst-Straße 1 · D-78112 St. Georgen · Phone: +49(0)7724/81-0 · Fax: +49(0)7724/81-1309 · info2@de.ebmpapst.com · www.ebmpapst.com