8400N Series Tubeaxial

80x80x25mm



- DC fans with electronically commutated external rotor motor. Fully integrated commutation electronics.
- With electronic protection against reverse polarity, blocking and overloading; partially impedance protected.
- Mounting from either face using four 4.3 mm holes.
- Fan of fiberglass reinforced plastic. PBTP housing, PA impeller.
- Air exhaust over struts. Rotational direction CCW looking at rotor.
- Electrical connection via 2 leads AWG 24, TR 64. Stripped and tinned ends.
- UL, CSA, VDE approvals on most models, please contact application engineering.

Part Number	Curve	CFM @ 0	VDC	Volt. Range	Power (W)	dBA	Max Amb. Temp C	Bearing Type	Features	Wgt. (lbs)
8412NGLE	1	19.4	12	8 to 15	0.5	12	85	Sintec	Leads	0.21
8412NLE	1	19.4	12	8 to 15	0.3	17	85	Ball	Leads	0.21
8412NGMLE	2	26.5	12	8 to 15	0.9	19	80	Sintec	Leads	0.21
8412NMLE	2	26.5	12	8 to 15	0.6	21	85	Ball	Leads	0.21
8412NGME	3	34.1	12	8 to 15	1.4	26	75	Sintec	Leads	0.21
8412NME	3	34.1	12	8 to 15	1.0	27	75	Ball	Leads	0.21
8412NG	4	40.6	12	8 to 15	2.0	32	70	Sintec	Leads	0.21
8412N	4	40.6	12	8 to 15	2.0	32	70	Ball	Leads	0.21
8412NH	5	46.5	12	8 to 13.2	2.2	37	70	Ball	Leads	0.21
8412NGH	5	46.5	12	8 to 13.2	2.2	37	70	Sintec	Leads	0.21

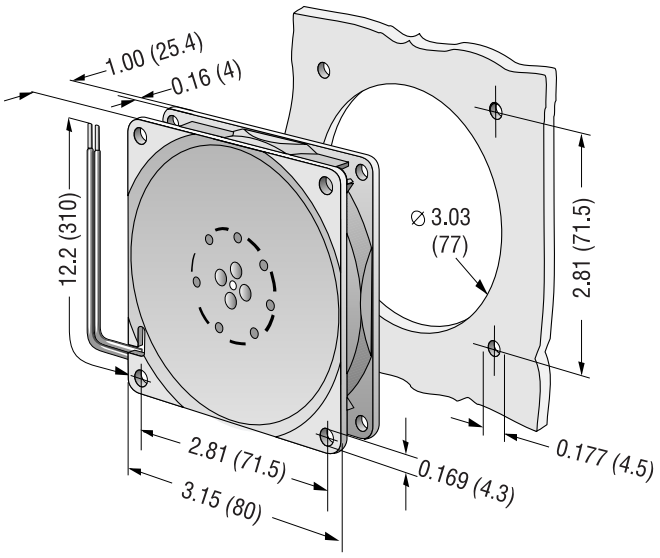

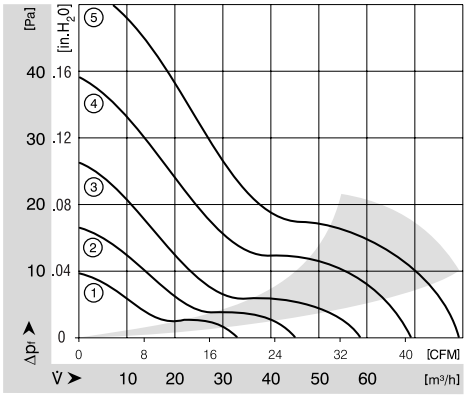

ebmpapst

e-mail: sales@us.ebmpapst.com · TEL: 860-674-1515 · FAX: 860-674-8536
ebm-papst Inc., 100 Hyde Road, Farmington, CT 06034 USA

ebm-papst Inc., 2006 © ebm-papst Inc. reserves the right to change any specifications or data without notice

80x80x25mm



- DC fans with electronically commutated external rotor motor. Fully integrated commutation electronics.
- With electronic protection against reverse polarity, blocking and overloading; partially impedance protected.
- Mounting from either face using four 4.3 mm holes.
- Fan of fiberglass reinforced plastic. PBTP housing, PA impeller.
- Air exhaust over struts. Rotational direction CCW looking at rotor.
- Electrical connection via 2 leads AWG 24, TR 64. Stripped and tinned ends.
- UL, CSA, VDE approvals on some models, please contact application engineering.

Part Number	Curve	CFM @ 0	VDC	Volt. Range	Power (W)	dBA	Max Amb. Temp C	Bearing Type	Features	Wgt. (lbs)
8414NL	1	19.4	24	18 to 28	0.7	17	70	Ball	Leads	0.21
8414NGL	1	19.4	24	18 to 28	0.7	12	70	Sintec	Leads	0.21
8414NML	2	26.5	24	18 to 28	1.1	21	70	Ball	Leads	0.21
8414NGML	2	26.5	24	18 to 28	1.1	19	70	Sintec	Leads	0.21
8414NGM	3	34.1	24	18 to 28	1.4	26	70	Sintec	Leads	0.21
8414NM	3	34.1	24	18 to 28	1.4	27	70	Ball	Leads	0.21
8414N	4	40.6	24	18 to 28	2.0	32	70	Ball	Leads	0.21
8414NG	4	40.6	24	18 to 28	2.0	32	70	Sintec	Leads	0.21
8414NGH	5	46.5	24	18 to 28	2.4	37	70	Sintec	Leads	0.21
8414NH	5	46.5	24	18 to 28	2.4	37	70	Ball	Leads	0.21

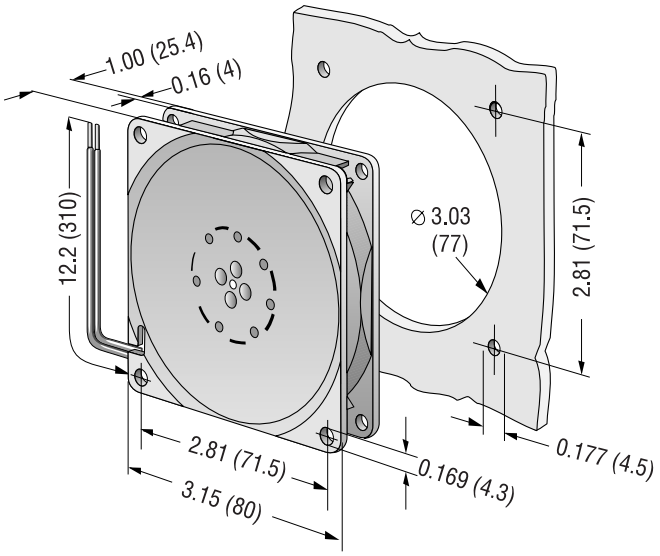

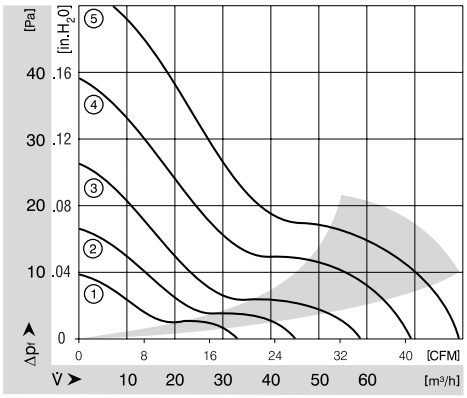

e-mail: sales@us.ebmpapst.com · TEL: 860-674-1515 · FAX: 860-674-8536
ebm-papst Inc., 100 Hyde Road, Farmington, CT 06034 USA
ebm-papst Inc., 2006 © ebm-papst Inc. reserves the right to change any specifications or data without notice