DC axial compact fan



ebm-papst St. Georgen GmbH & Co. KG
Hermann-Papst-Str. 1
D-78112 St. Georgen
Phone +49 (0) 7724 81-0
Fax +49 (0) 7724 81-1309
info2@de.ebmpapst.com
www.ebmpapst.com

Nominal data

Type	8412 NH	
Nominal voltage	VDC	12
Nominal voltage range	VDC	8 .. 13.2
Speed	min^{-1}	3600
Power consumption	W	1.7
Min. ambient temperature	°C	-20
Max. ambient temperature	°C	70
Air flow	m^3/h	79
Sound power level	B	5.0
Sound pressure level	dB(A)	37

ml = Max. load · me = Max. efficiency · fa = Free air · cs = Customer specification · ce = Customer equipment
Subject to change

DC axial compact fan

Technical description

Housing material	Glass-fiber reinforced PBT plastic
Impeller material	Glass-fiber reinforced PA plastic
Weight	0.095 kg
Dimensions	80 x 80 x 25 mm
Airflow direction	Exhaust over struts
Direction of rotation	Counterclockwise, viewed toward rotor
Storage	Ball bearing
Service life L10 at 40 °C	70000 h
Service life L10 at maximum temperature	35000 h
Cable	Leads AWG 24, TR 64, stripped and tin-plated.
Motor protection	Protection against reverse polarity and blocked rotor.
Locked-rotor protection	Locked-rotor and overload protection
Approval	VDE, CSA, UL, CE
Option	Possible custom designs: Speed signal Go / No-go alarm Alarm with speed limit External temperature sensor Internal temperature sensor PWM control input Analog control input Moisture protection Degree of protection: IP54 / IP68

ebm-papst St. Georgen GmbH & Co. KG · Hermann-Papst-Str. 1 · D-78112 St. Georgen · Phone +49 (0) 7724 81-0 · Fax +49 (0) 7724 81-1309 · info2@de.ebmpapst.com · www.ebmpapst.com

DC axial compact fan

Product drawing

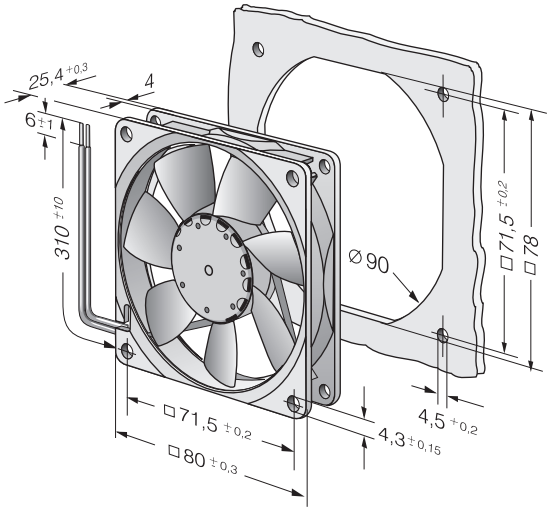

ebm-papst St. Georgen GmbH & Co. KG · Hermann-Papst-Str. 1 · D-78112 St. Georgen · Phone +49 (0) 7724 81-0 · Fax +49 (0) 7724 81-1309 · info2@de.ebmpapst.com · www.ebmpapst.com

DC axial compact fan

Curves: Air performance

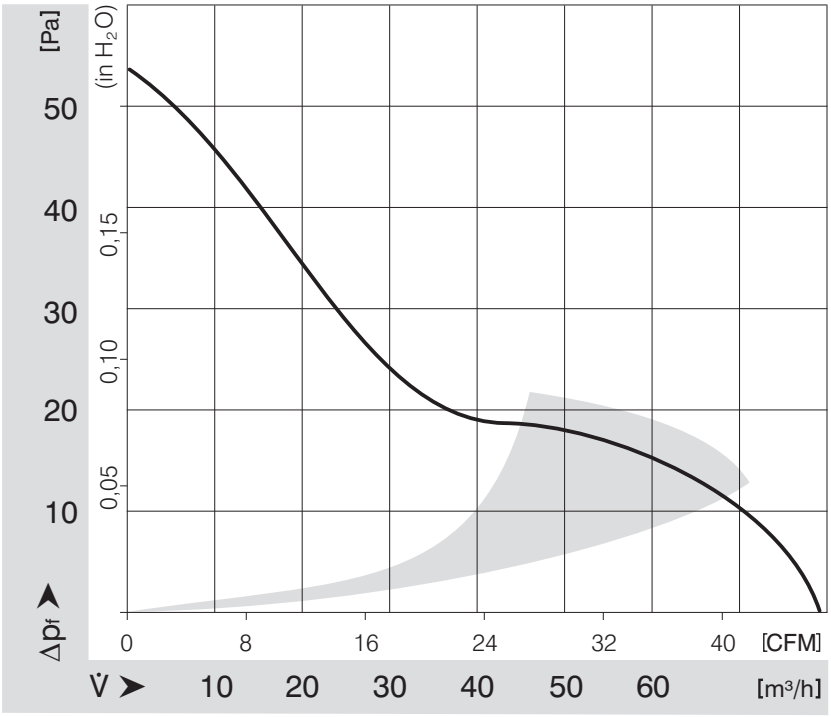

ebm-papst St. Georgen GmbH & Co. KG · Hermann-Papst-Str. 1 · D-78112 St. Georgen · Phone +49 (0) 7724 81-0 · Fax +49 (0) 7724 81-1309 · info2@de.ebmpapst.com · www.ebmpapst.com