DC axial compact fan



ebm-papst St. Georgen GmbH & Co. KG
Hermann-Papst-Str. 1
D-78112 St. Georgen
Phone +49 (0) 7724 81-0
Fax +49 (0) 7724 81-1309
info2@de.ebmpapst.com
www.ebmpapst.com

Nominal data

Type	8414 NH	
Nominal voltage	VDC	24
Nominal voltage range	VDC	18 .. 26
Speed	min^{-1}	3600
Power input	W	2.4
Min. ambient temperature	°C	-20
Max. ambient temperature	°C	70
Air flow	m^3/h	79
Sound power level	B	5.0
Sound pressure level	dB(A)	37

ml = Max. load · me = Max. efficiency · fa = Running at free air · cs = Customer specs · cu = Customer unit
Subject to alterations

DC axial compact fan

Technical features

Housing material	Fibreglass-reinforced plastic (PBT)
Impeller material	Fibreglass-reinforced plastic (PA)
Mass	0.095 kg
Dimensions	80 x 80 x 25 mm
Direction of air flow	Air exhaust over bars
Direction of rotation	Left, looking at rotor
Bearing	Ball bearings
Lifetime L10 at 40 °C	70000 h
Lifetime L10 at maximum temperature	35000 h
Connection line	Single strands AWG 24, TR 64, bared and tin-plated.
Motor protection	Protected against reverse polarity and locking.
Locked-rotor protection	Blocking and overload protection
Approval	VDE, CSA, UL, CE

ebm-papst St. Georgen GmbH & Co. KG · Hermann-Papst-Str. 1 · D-78112 St. Georgen · Phone +49 (0) 7724 81-0 · Fax +49 (0) 7724 81-1309 · info2@de.ebmpapst.com · www.ebmpapst.com

DC axial compact fan

Product drawing

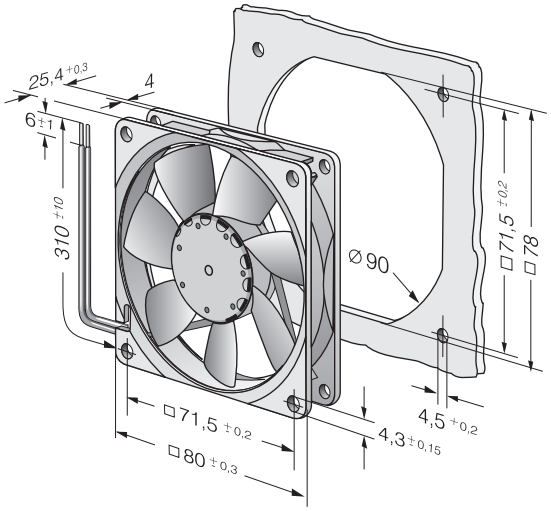

ebm-papst St. Georgen GmbH & Co. KG · Hermann-Papst-Str. 1 · D-78112 St. Georgen · Phone +49 (0) 7724 81-0 · Fax +49 (0) 7724 81-1309 · info2@de.ebmpapst.com · www.ebmpapst.com

DC axial compact fan

Charts: Air flow

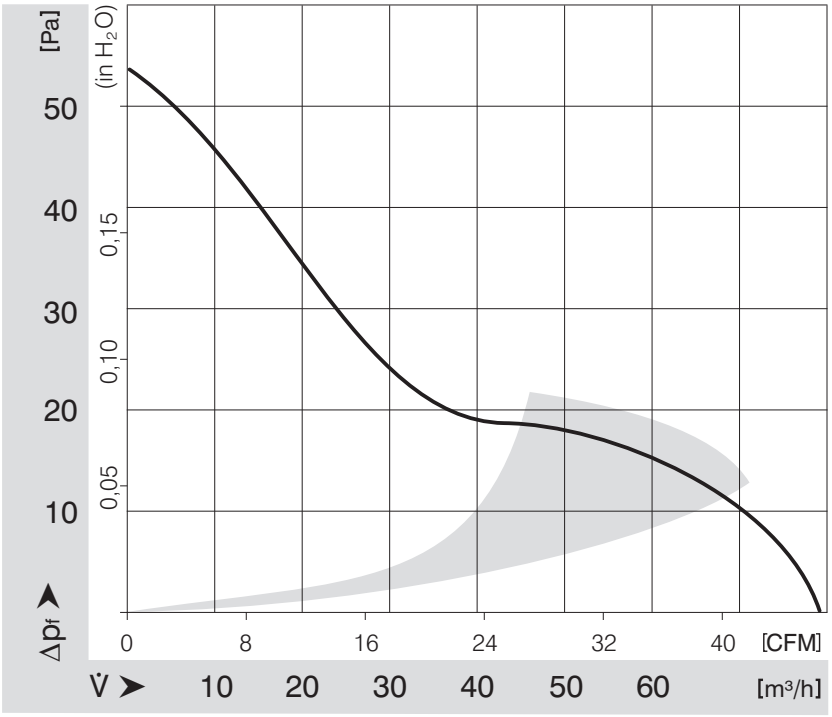

ebm-papst St. Georgen GmbH & Co. KG · Hermann-Papst-Str. 1 · D-78112 St. Georgen · Phone +49 (0) 7724 81-0 · Fax +49 (0) 7724 81-1309 · info2@de.ebmpapst.com · www.ebmpapst.com