8454 /2 H4P

DC axial fan



ebm-papst St. Georgen GmbH & Co. KG
Hermann-Papst-Str. 1
D-78112 St. Georgen
Phone +49 (0) 7724 81-0
Fax +49 (0) 7724 81-1309
info2@de.ebmpapst.com
www.ebmpapst.com

Nominal data

Type	8454 /2 H4P	
Nominal voltage	VDC	24
Nominal voltage range	VDC	20 .. 26,4
Speed	min^{-1}	6200
Power input	W	6.8
Min. ambient temperature	°C	-20
Max. ambient temperature	°C	70
Air flow	m^3/h	117
Sound power level	B	6.4
Sound pressure level	dB(A)	50

ml = Max. load · me = Max. efficiency · fa = Running at free air · cs = Customer specs · cu = Customer unit
Subject to alterations

Technical features

Housing material	Fibreglass-reinforced plastic (PBT)
Impeller material	Fibreglass-reinforced plastic (PA)
Mass	0.105 kg
Dimensions	80 x 80 x 25 mm
Direction of air flow	Air exhaust over bars
Direction of rotation	Clockwise, looking at rotor
Bearing	Ball bearing
Lifetime L10 at 40 °C	60000 h
Lifetime L10 at maximum temperature	30000 h
Connection line	With single strands AWG 24, TR 64

ebm-papst St. Georgen GmbH & Co. KG · Hermann-Papst-Str. 1 · D-78112 St. Georgen · Phone +49 (0) 7724 81-0 · Fax +49 (0) 7724 81-1309 · info2@de.ebmpapst.com · www.ebmpapst.com

DC axial fan

Product drawing

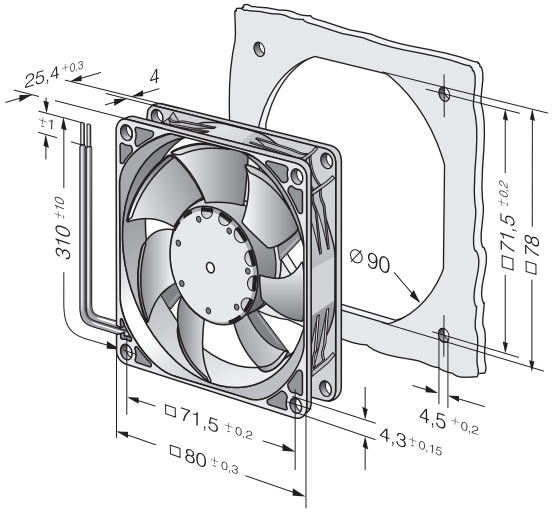

ebm-papst St. Georgen GmbH & Co. KG · Hermann-Papst-Str. 1 · D-78112 St. Georgen · Phone +49 (0) 7724 81-0 · Fax +49 (0) 7724 81-1309 · info2@de.ebmpapst.com · www.ebmpapst.com

DC axial fan

Charts

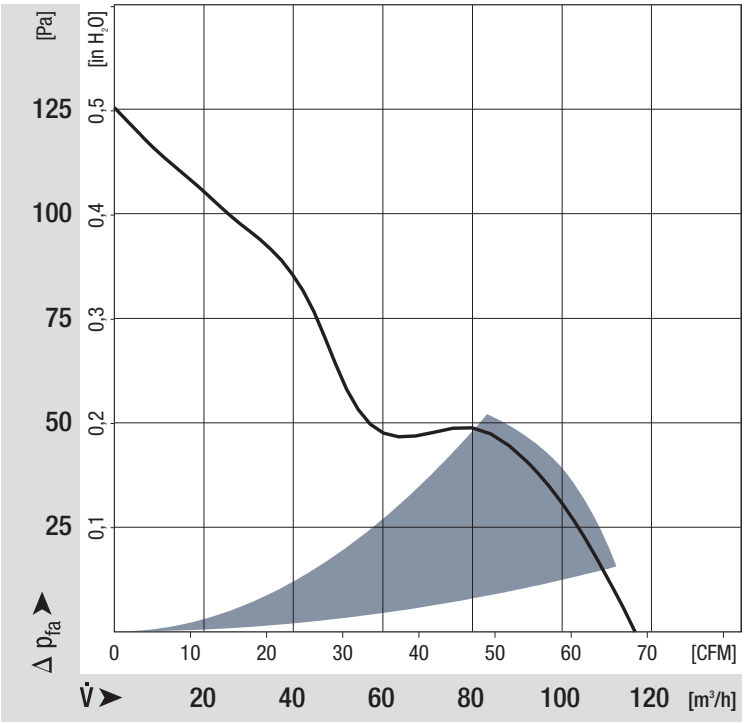

ebm-papst St. Georgen GmbH & Co. KG · Hermann-Papst-Str. 1 · D-78112 St. Georgen · Phone +49 (0) 7724 81-0 · Fax +49 (0) 7724 81-1309 · info2@de.ebmpapst.com · www.ebmpapst.com