A2D200-AI18-01

AC axial fan

sickled blades (S series)



ebm-papst Mulfingen GmbH & Co. KG
Bachmühle 2
D-74673 Mulfingen
Phone: +49(0)7938/81-0
Fax: +49(0)7938/81-110
info1@de.ebmpapst.com
www.ebmpapst.com

Nominal data

Type	**A2D200-AI18-01**
Motor	**M2D068-BC**

Phase		3~	3~
Nominal voltage	[V]	400	400
Connection		Y	Y
Frequency	[Hz]	50	60
Type of data definition		rfa	rfa
Valid for approval / standard		CE	CE
Speed	[min^{-1}]	2600	2900
Power input	[W]	68	70
Current draw	[A]	0.17	0.13
Max. back pressure	[Pa]	140	140
Max. ambient temperature	[°C]	45	70

ml = max. load · me = max. efficiency · rfa = running at free air · cs = customer specs · cu = customer unit
Subject to alterations

AC axial fan

sickled blades (S series)

Technical features

Leackage current	< 0.75 mA
Size	200 mm
Operation mode	S1
Direction of rotation	Counter-clockwise, seen on rotor
Mounting position	Shaft horizontal or rotor on bottom; rotor on top on request
Humidity class	F1-2
Direction of air flow	"A"
Insulation class	"B"
Cable exit	Lateral
Condensate discharge holes	Rotor-side
Bearing motor	Ball bearing
Mass	1.6 kg
Material of blades	Sheet steel, coated in black
Product conforming to standard	EN 60335-1
Surface of rotor	Coated in black
Number of blades	9
Type of protection	IP 44
Protection class	I
Max. permissible ambient motor temp. (transp./ storage)	+ 80 °C
Min. permissible ambient motor temp. (transp./storage)	- 40 °C
Approval	CCC

ebm-papst Mulfingen GmbH & Co. KG · Bachmühle 2 · D-74673 Mulfingen · Phone: +49(0)7938/81-0 · Fax: +49(0)7938/81-110 · info1@de.ebmpapst.com · www.ebmpapst.com

AC axial fan

sickled blades (S series)

Product drawing

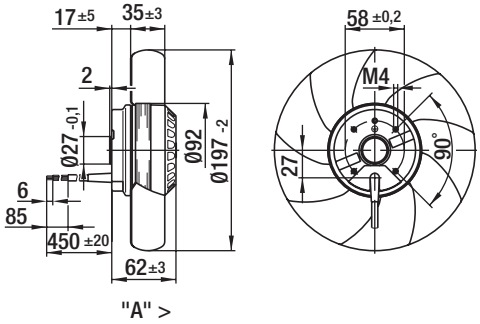

ebm-papst Mulfingen GmbH & Co. KG · Bachmühle 2 · D-74673 Mulfingen · Phone: +49(0)7938/81-0 · Fax: +49(0)7938/81-110 · info1@de.ebmpapst.com · www.ebmpapst.com

AC axial fan

sickled blades (S series)

Connection screen

Delta (3~ 230 VAC)

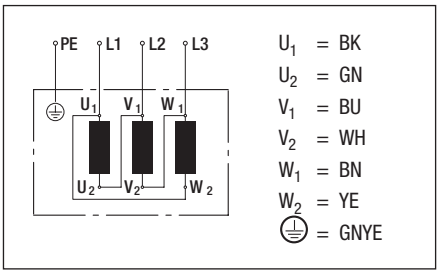

Star (3~ 400 VAC)

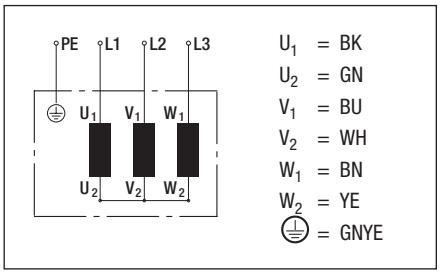

ebm-papst Mulfingen GmbH & Co. KG · Bachmühle 2 · D-74673 Mulfingen · Phone: +49(0)7938/81-0 · Fax: +49(0)7938/81-110 · info1@de.ebmpapst.com · www.ebmpapst.com

AC axial fan

sickled blades (S series)

Charts: Air flow 50 Hz

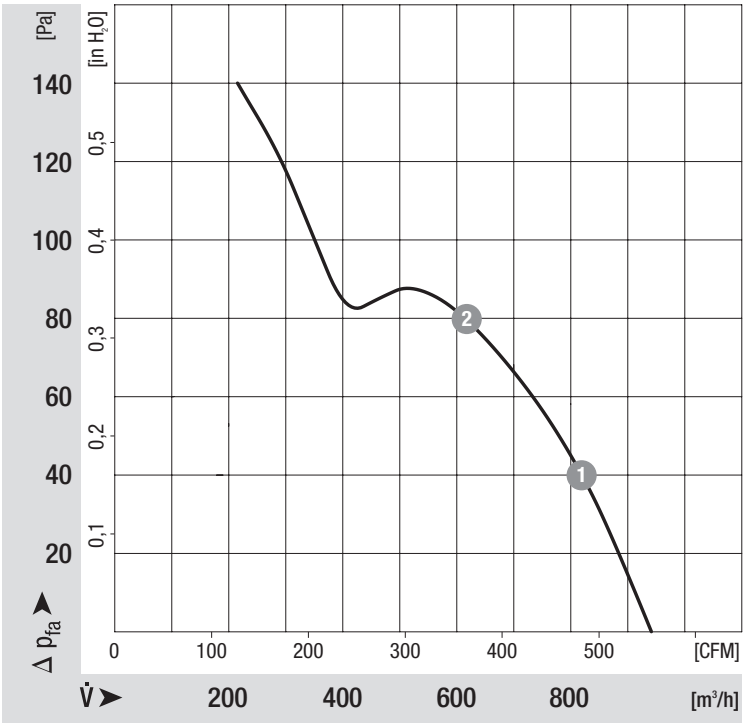

Measured values

	n	P_1	I
	[min-1]	[W]	[A]
1	2540	70	0.17
2	2470	74	0.17

ebm-papst Mulfingen GmbH & Co. KG · Bachmühle 2 · D-74673 Mulfingen · Phone: +49(0)7938/81-0 · Fax: +49(0)7938/81-110 · info1@de.ebmpapst.com · www.ebmpapst.com

AC axial fan

sickled blades (S series)

Charts: Air flow 60 Hz

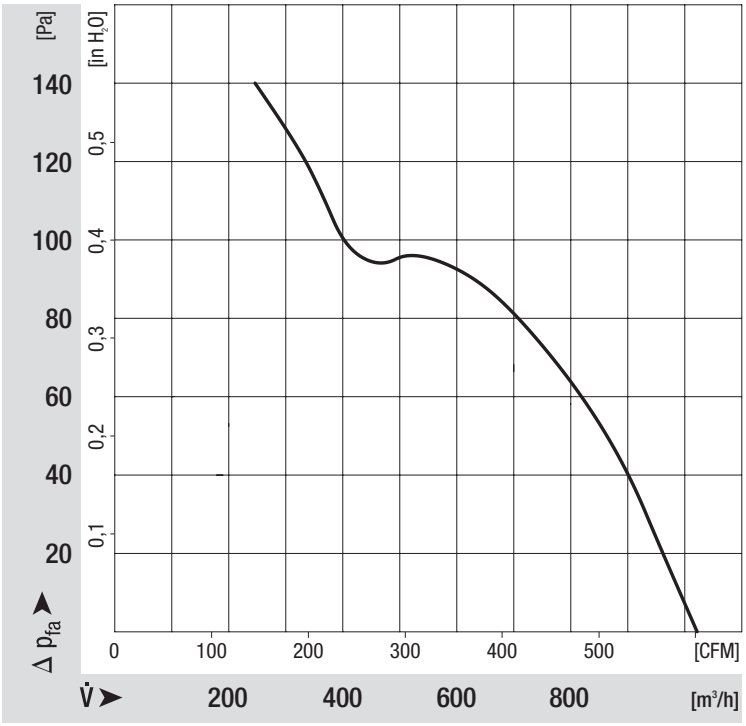

ebm-papst Mulfingen GmbH & Co. KG · Bachmühle 2 · D-74673 Mulfingen · Phone: +49(0)7938/81-0 · Fax: +49(0)7938/81-110 · info1@de.ebmpapst.com · www.ebmpapst.com