A2D250-AH14-09

AC axial fan

sickled blades (S series)

ebm-papst Mulfingen GmbH & Co. KG
Bachmühle 2 · D-74673 Mulfingen
Phone +49 7938 81-0
Fax +49 7938 81-110
info1@de.ebmpapst.com
www.ebmpapst.com

Limited partnership · Headquarters Mulfingen
County court Stuttgart · HRA 590344

General partner Elektrobau Mulfingen GmbH · Headquarters Mulfingen
County court Stuttgart · HRB 590142

Nominal data

Type	**A2D250-AH14-09**
Motor	**M2D068-CC**

Phase		3~	3~	3~	3~	3~
Nominal voltage	VAC	400	400	400	460	460
Connection		Y	Y	Y	Y	Y
Frequency	Hz	50	60	60	60	60
Type of data definition		fa	fa	fa	fa	fa
Valid for approval / standard		CE	CE	UL 2111	CE	UL 2111
Speed	min^{-1}	2460	2580	2580	2750	2750
Power input	W	110	140	140	160	180
Current draw	A	0.19	0.22	0.22	0.23	0.24
Max. back pressure	Pa	100	100	100	120	120
Min. ambient temperature	°C	-25	-25	-25	-25	-25
Max. ambient temperature	°C	60	60	60	60	60

ml = max. load · me = max. efficiency · fa = running at free air · cs = customer specs · cu = customer unit
Subject to alterations

AC axial fan

sickled blades (S series)

Technical features

Mass	1.8 kg
Size	250 mm
Surface of rotor	Coated in black
Material of blades	Sheet steel, coated in black
Number of blades	7
Direction of air flow	"V"
Direction of rotation	Counter-clockwise, seen on rotor
Type of protection	IP 44; Depending on installation and position as per EN 60034-5
Insulation class	"F"
Humidity class	F5
Max. permissible ambient motor temp. (transp./ storage)	+ 80 °C
Min. permissible ambient motor temp. (transp./storage)	- 40 °C
Mounting position	Shaft horizontal or rotor on bottom; rotor on top on request
Condensate discharge holes	Rotor-side
Operation mode	S1
Motor bearing	Ball bearing
Touch current acc. IEC 60990 (measuring network Fig. 4, TN system)	< 0.75 mA
Motor protection	Thermal overload protector (TOP) brought out
Cable exit	Axial
Protection class	I (if protective earth is connected by customer)
Product conforming to standard	EN 60335-1; CE
Approval	UL 1004-1; CSA C22.2 Nr.100

ebm-papst Mulfingen GmbH & Co. KG · Bachmühle 2 · D-74673 Mulfingen · Phone +49 (0) 7938 81-0 · Fax +49 (0) 7938 81-110 · info1@de.ebmpapst.com · www.ebmpapst.com

AC axial fan

sickled blades (S series)

Product drawing

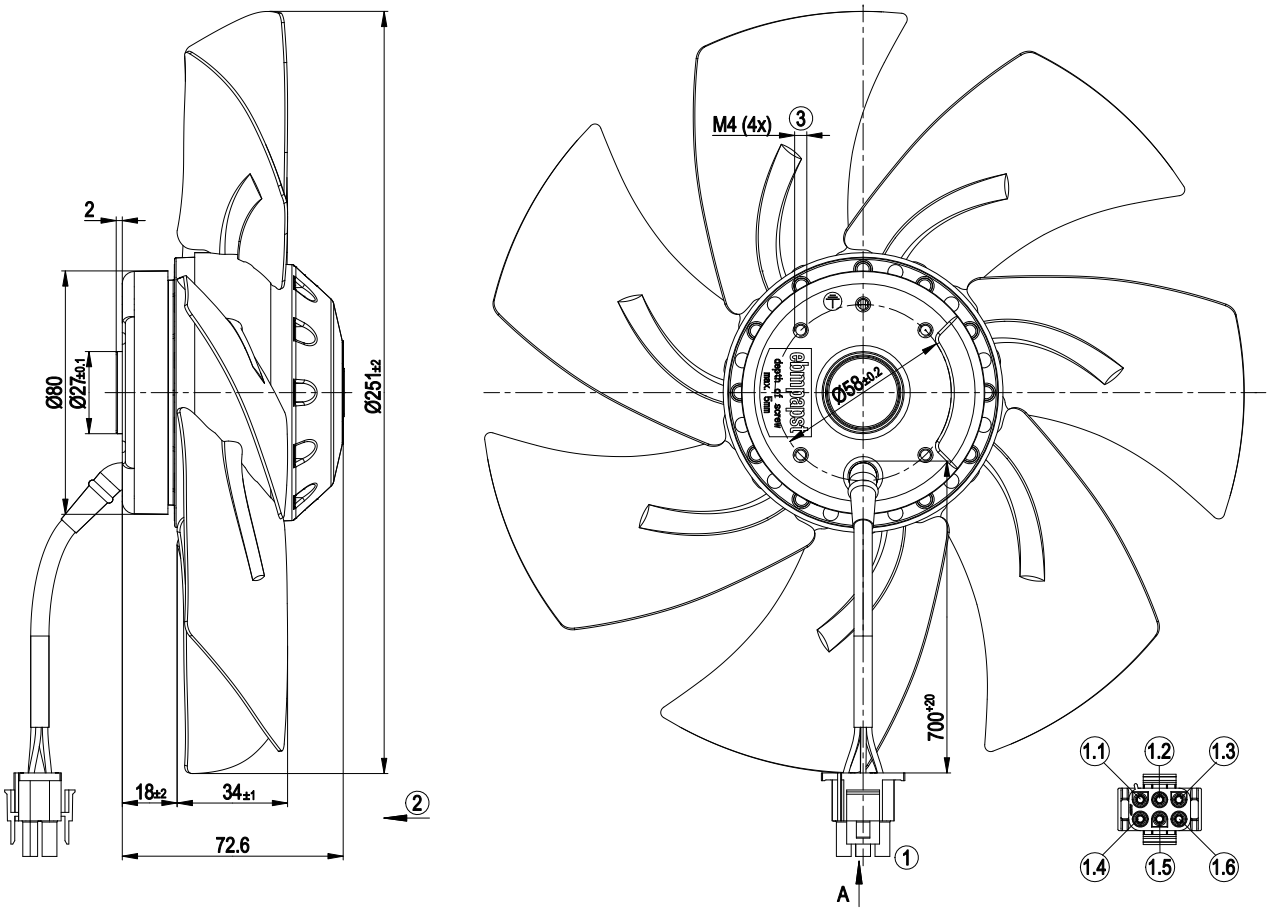

1	Connection line PFA AWG20, 1x AMP connector housing 350715-4 with 6x AMP female terminal 926884-1
1.1	black
1.2	Blue
1.3	brown
1.4	green/yellow
1.5	grey
1.6	grey
2	Direction of air flow "V"
3	Depth of screw max. 5 mm

ebm-papst Mulfingen GmbH & Co. KG · Bachmühle 2 · D-74673 Mulfingen · Phone +49 (0) 7938 81-0 · Fax +49 (0) 7938 81-110 · info1@de.ebmpapst.com · www.ebmpapst.com

AC axial fan

sickled blades (S series)

Connection screen

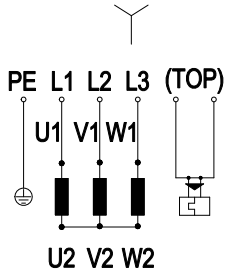

L1	= U1 = black	L2	= V1 = blue	L3	= W1 = brown
PE	green/yellow	TOP	2 x grey	Y	Star connection

ebm-papst Mulfingen GmbH & Co. KG · Bachmühle 2 · D-74673 Mulfingen · Phone +49 (0) 7938 81-0 · Fax +49 (0) 7938 81-110 · info1@de.ebmpapst.com · www.ebmpapst.com

AC axial fan

sickled blades (S series)

Charts: Air flow 50 Hz Y

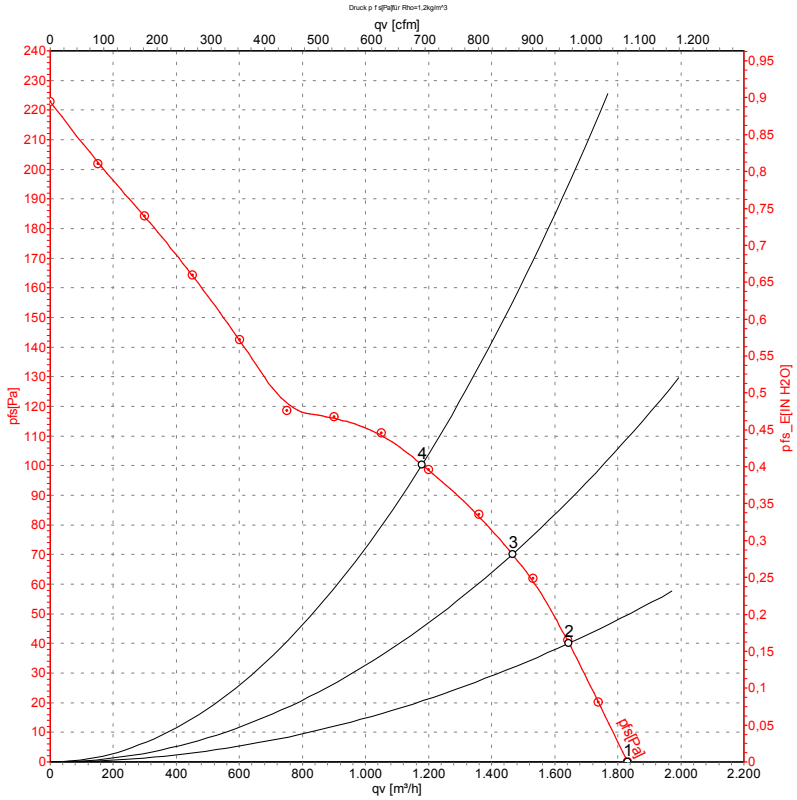

Measurement: LU-76487

Air performance measured as per ISO 5801 Installation category A. For detailed information on the measuring set-up, please contact ebm-papst. Suction-side noise levels: LwA measured as per ISO 13347 / LpA measured with 1m distance to fan axis. The values given are valid under the measuring conditions mentioned above and may vary according to the actual installation situation. With any deviation from the standard set-up, the specific values have to be checked and reviewed with the unit installed.

Measured values

	Conn.	U	f	n	P_e	I	qv	p_{fs}
		V	Hz	min^{-1}	W	A	m^3/h	Pa
1	Y	400	50	2460	110	0.19	1830	0
2	Y	400	50	2395	113	0.20	1645	40
3	Y	400	50	2350	120	0.21	1465	70
4	Y	400	50	2290	126	0.22	1180	100

Conn. = Connection · U = Supply voltage · f = Frequency · n = Speed · P_e = Power input · I = Current draw · qv = Air flow · p_{fs} = Pressure increase

ebm-papst Mulfingen GmbH & Co. KG · Bachmühle 2 · D-74673 Mulfingen · Phone +49 (0) 7938 81-0 · Fax +49 (0) 7938 81-110 · info1@de.ebmpapst.com · www.ebmpapst.com

AC axial fan

sickled blades (S series)

Charts: Air flow 60 Hz Y

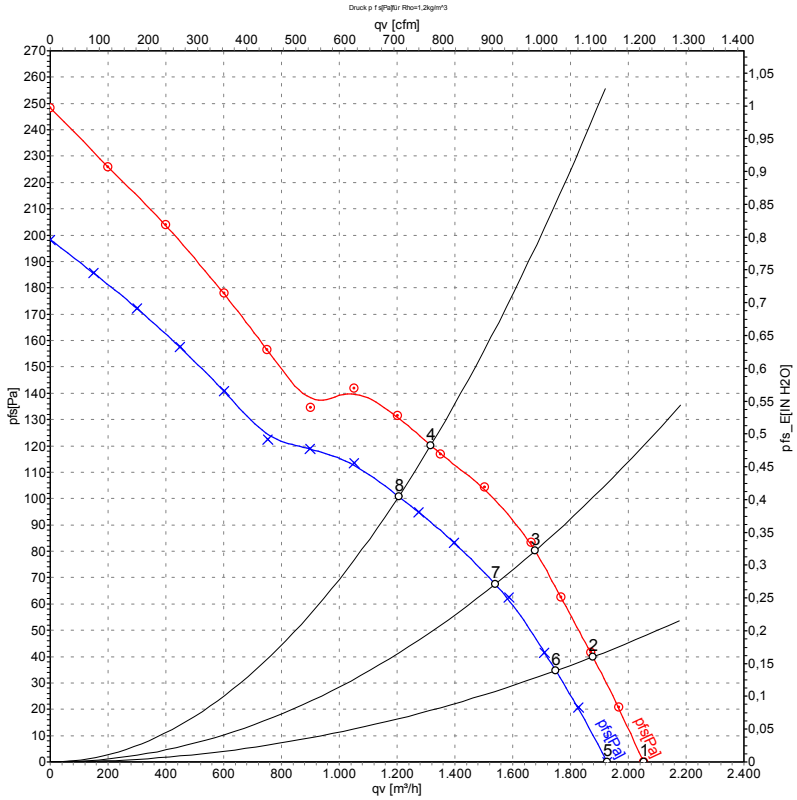

Measurement: LU-76489
Measurement: LU-76488

Air performance measured as per ISO 5801 Installation category A. For detailed information on the measuring set-up, please contact ebm-papst. Suction-side noise levels: LwA measured as per ISO 13347 / LpA measured with 1m distance to fan axis. The values given are valid under the measuring conditions mentioned above and may vary according to the actual installation situation. With any deviation from the standard set-up, the specific values have to be checked and reviewed with the unit installed.

Measured values

	Conn.	U	f	n	P_e	I	qv	p_{fs}
		V	Hz	min^{-1}	W	A	m^3/h	Pa
1	Y	460	60	2750	160	0.23	2055	0
2	Y	460	60	2690	165	0.24	1875	40
3	Y	460	60	2600	177	0.25	1675	80
4	Y	460	60	2515	187	0.26	1315	120
5	Y	400	60	2580	140	0.22	1925	0
6	Y	400	60	2500	145	0.23	1750	35
7	Y	400	60	2405	154	0.24	1540	68
8	Y	400	60	2310	161	0.26	1205	100

Conn. = Connection · U = Supply voltage · f = Frequency · n = Speed · P_e = Power input · I = Current draw · qv = Air flow · p_{fs} = Pressure increase

ebm-papst Mulfingen GmbH & Co. KG · Bachmühle 2 · D-74673 Mulfingen · Phone +49 (0) 7938 81-0 · Fax +49 (0) 7938 81-110 · info1@de.ebmpapst.com · www.ebmpapst.com