A2E300-AC47-01

AC axial fan

straight blades (A series)



ebm-papst Mulfingen GmbH & Co. KG
Bachmühle 2 · D-74673 Mulfingen
Phone +49 7938 81-0
Fax +49 7938 81-110
info1@de.ebmpapst.com
www.ebmpapst.com

Limited partnership · Headquarters Mulfingen
County court Stuttgart · HRA 590344

General partner Elektrobau Mulfingen GmbH · Headquarters Mulfingen
County court Stuttgart · HRB 590142

ErP2015 EXCEEDS THE NORM

Nominal data

Type	**A2E300-AC47-01**
Motor	**M2E068-EC**

Phase		1~	1~	1~	1~
Nominal voltage	VAC	230	230	230	230
Frequency	Hz	50	60	60	60
Type of data definition		fa	fa	fa	fa
Valid for approval / standard		CE	UL	CSA	CE
Speed	min^{-1}	2650	2900	2900	2900
Power input	W	140	200	200	190
Current draw	A	0.62	0.88	0.88	0.83
Motor capacitor	µF	5	5	5	5
Capacitor voltage	VDB	400	400	400	400
Capacitor standard			P0 (CE)	UL	
Max. back pressure	Pa	150	150	150	150
Min. ambient temperature	°C	-25	-25	-25	-25
Max. ambient temperature	°C	55	50	50	50

ml = max. load · me = max. efficiency · fa = running at free air · cs = customer specs · cu = customer unit
Subject to alterations

Data according to ErP directive

Installation category	A
Efficiency category	Static
Variable speed drive	No
Specific ratio*	1.00

* Specific ratio = 1 + p_{fs} / 100 000 Pa

		Actual	Request 2013	Request 2015
Overall efficiency η_{es}		28.7	24.6	28.6
Efficiency grade N		40.1	36	40
Power input P_e	kW	0.16		
Air flow q_v	m^3/h	1650		
Pressure increase p_{fs}	Pa	100		
Speed n	min^{-1}	2565		

Data established at point of optimum efficiency

ebmpapst

AC axial fan

straight blades (A series)

Technical features

Mass	2.5 kg
Size	300 mm
Surface of rotor	Coated in black
Material of blades	Sheet steel, coated in black
Number of blades	5
Direction of air flow	"V"
Direction of rotation	Counter-clockwise, seen on rotor
Type of protection	IP 44; Depending on installation and position as per EN 60034-5
Insulation class	"B"
Humidity class	F1-2
Max. permissible ambient motor temp. (transp./ storage)	+ 80 °C
Min. permissible ambient motor temp. (transp./storage)	- 40 °C
Mounting position	Shaft horizontal or rotor on top; rotor on bottom on request
Condensate discharge holes	Rotor-side
Operation mode	S1
Motor bearing	Ball bearing
Touch current acc. IEC 60990 (measuring network Fig. 4, TN system)	< 0.75 mA
Motor protection	Thermal overload protector (TOP) wired internally
Cable exit	Variable
Protection class	I (if protective earth is connected by customer)
Product conforming to standard	EN 60335-1; CE
Approval	GOST; CCC

ebm-papst Mulfingen GmbH & Co. KG · Bachmühle 2 · D-74673 Mulfingen · Phone +49 (0) 7938 81-0 · Fax +49 (0) 7938 81-110 · info1@de.ebmpapst.com · www.ebmpapst.com

AC axial fan

straight blades (A series)

Product drawing

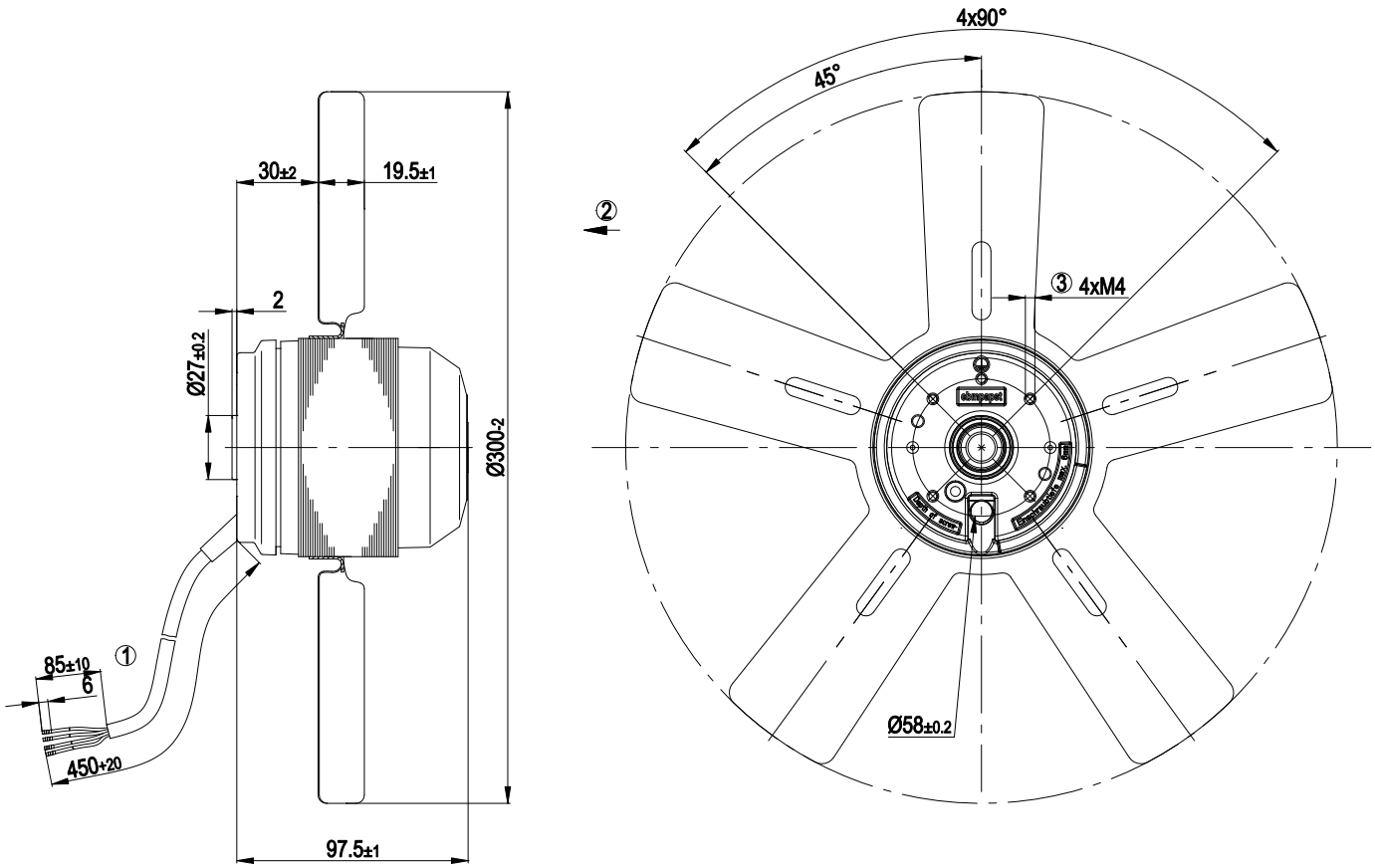

1	Connection line PVC 4G 0.5 mm², 4x brass lead tips crimped
2	Direction of air flow "V"

Connection screen

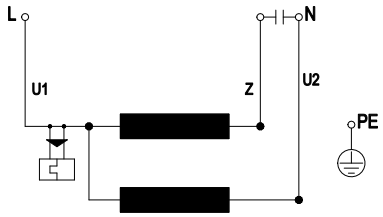

U1	blue	Z	brown	U2	black
PE	green/yellow				

ebm-papst Mulfingen GmbH & Co. KG · Bachmühle 2 · D-74673 Mulfingen · Phone +49 (0) 7938 81-0 · Fax +49 (0) 7938 81-110 · info1@de.ebmpapst.com · www.ebmpapst.com

AC axial fan

straight blades (A series)

Charts: Air flow 50 Hz

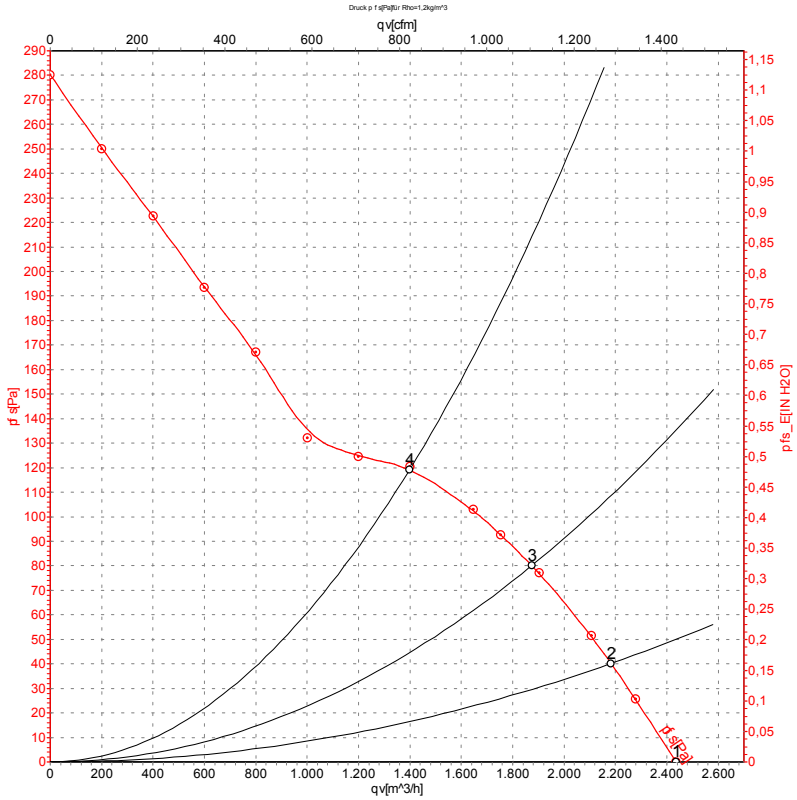

Measurement: LU-66600

Air performance measured as per ISO 5801 Installation category A. For detailed information on the measuring set-up, please contact ebm-papst. Suction-side noise levels: LwA measured as per ISO 13347 / LpA measured with 1m distance to fan axis. The values given are valid under the measuring conditions mentioned above and may vary according to the actual installation situation. With any deviation from the standard set-up, the specific values have to be checked and reviewed with the unit installed.

Measured values

	U	f	n	P_e	I	qv	p_{fs}
	V	Hz	min^{-1}	W	A	m^3/h	Pa
1	230	50	2650	140	0.62	2435	0
2	230	50	2615	151	0.66	2185	40
3	230	50	2580	158	0.69	1875	80
4	230	50	2560	162	0.71	1400	120

U = Supply voltage · f = Frequency · n = Speed · P_e = Power input · I = Current draw · qv = Air flow · p_{fs} = Pressure increase

ebm-papst Mulfingen GmbH & Co. KG · Bachmühle 2 · D-74673 Mulfingen · Phone +49 (0) 7938 81-0 · Fax +49 (0) 7938 81-110 · info1@de.ebmpapst.com · www.ebmpapst.com

AC axial fan

straight blades (A series)

Charts: Air flow 60 Hz

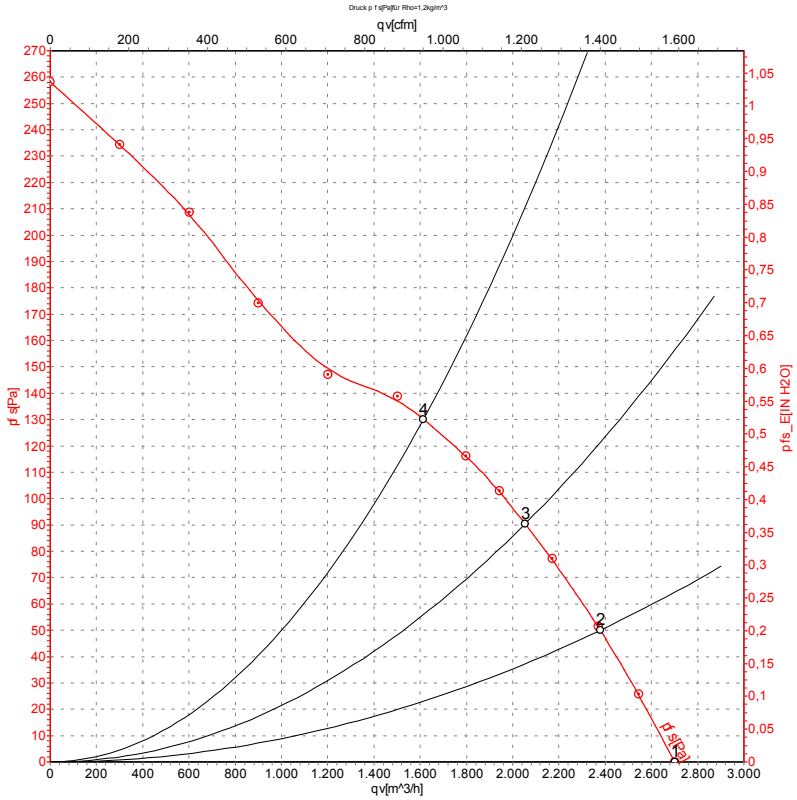

Measurement: LU-66601

Air performance measured as per ISO 5801 Installation category A. For detailed information on the measuring set-up, please contact ebm-papst. Suction-side noise levels: LwA measured as per ISO 13347 / LpA measured with 1m distance to fan axis. The values given are valid under the measuring conditions mentioned above and may vary according to the actual installation situation. With any deviation from the standard set-up, the specific values have to be checked and reviewed with the unit installed.

Measured values

	U	f	n	P_e	I	qv	p_{fs}
	V	Hz	min^{-1}	W	A	m^3/h	Pa
1	230	60	2900	190	0.83	2700	0
2	230	60	2865	205	0.90	2380	50
3	230	60	2805	213	0.93	2055	90
4	230	60	2755	218	0.95	1615	130

U = Supply voltage · f = Frequency · n = Speed · P_e = Power input · I = Current draw · qv = Air flow · p_{fs} = Pressure increase

ebm-papst Mulfingen GmbH & Co. KG · Bachmühle 2 · D-74673 Mulfingen · Phone +49 (0) 7938 81-0 · Fax +49 (0) 7938 81-110 · info1@de.ebmpapst.com · www.ebmpapst.com