AC axial fan

ebm-papst Mulfingen GmbH & Co. KG
Bachmühle 2
74673 Mulfingen
Phone: +49 7938 81-0
Fax: +49 7938 81-110
www.ebmpapst.com
info1@de.ebmpapst.com

Nominal data

Type	**A2S130-AA03-28**		
Motor	**M2S052-CA**		
Phase		1~	1~
Nominal voltage	[V]	230	230
Frequency	[Hz]	50	60
Type of data definition		rfa	rfa
Valid for approval / standard		CE	CE
Speed	[min^{-1}]	2800	3250
Power input	[W]	45	39
Current draw	[A]	0.31	0.25
Max. back pressure	[Pa]	80	120
Max. ambient temperature	[°C]	50	70

ml = max. load · me = max. efficiency · rfa = running at free air · cs = customer specs · cu = customer unit
Subject to alterations

AC axial fan

Technical features

Leackage current	< 0.75 mA
Size	130 mm
Operation mode	S1
Direction of rotation	Counter-clockwise, seen on rotor
Mounting position	Any
Direction of air flow	"V"
Insulation class	"B"
Cable exit	Variable
Condensate discharge holes	None, open rotor
Bearing motor	Ball bearing
Mass	0.9 kg
Material of blades	Sheet steel, coated in black
Motor protection	Thermal overload protector (TOP) wired internally
Product conforming to standard	CE; EN 60335-1
Surface of rotor	Rotor open, coated in black
Number of blades	7
Type of protection	IP 20
Max. permissible ambient motor temp. (transp./ storage)	+ 80 °C
Min. permissible ambient motor temp. (transp./storage)	- 40 °C
Approval	CSA C22.2 Nr.113; UL 507; VDE

ebm-papst Mulfingen GmbH & Co. KG · Bachmühle 2 · 74673 Mulfingen · Phone: +49 7938 81-0 · Fax: +49 7938 81-110 · www.ebmpapst.com · info1@de.ebmpapst.com

AC axial fan

Product drawing

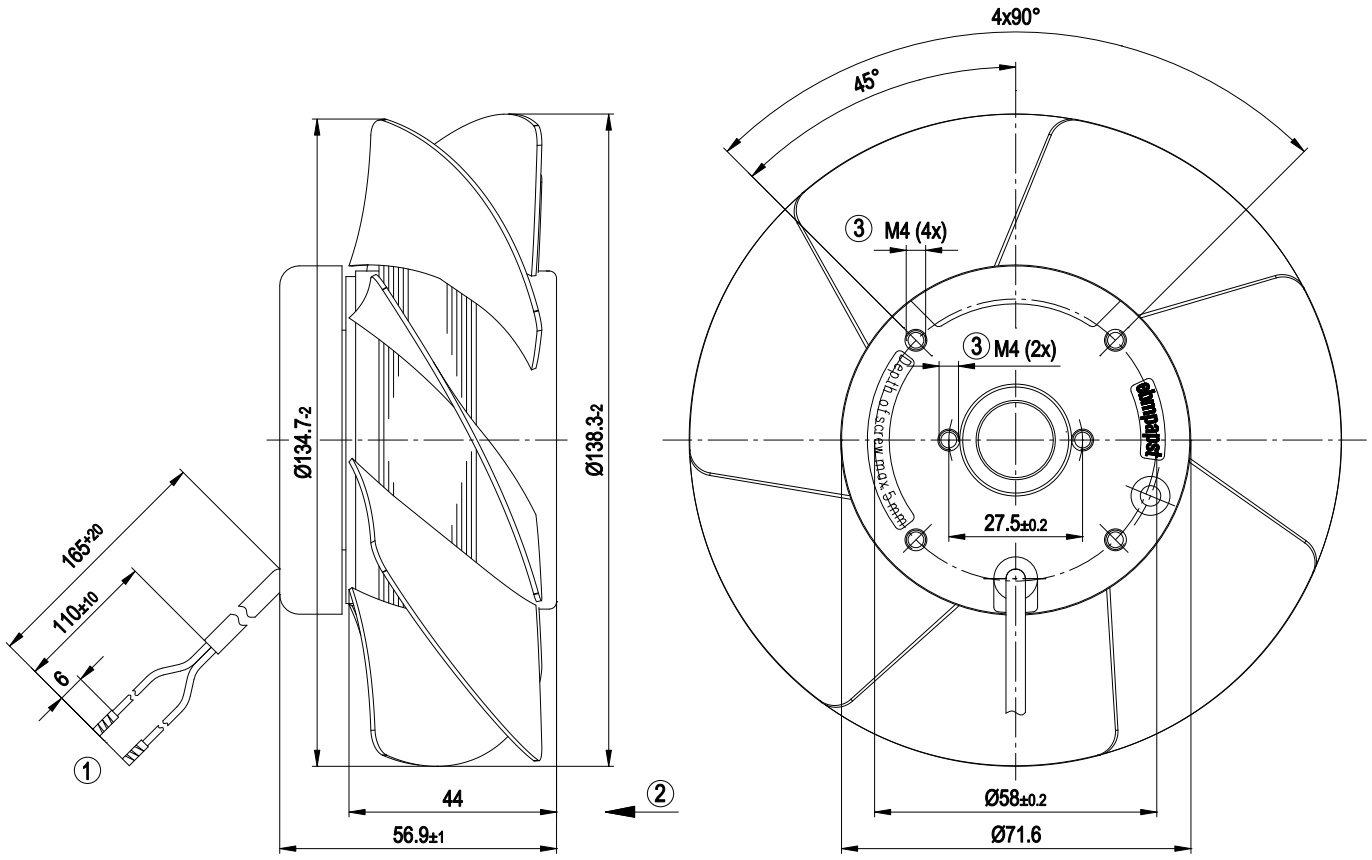

1	Connection line AWG20, 2x brass lead tips crimped
2	Direction of air flow "V"
3	Depth of screw max. 5 mm

Connection screen

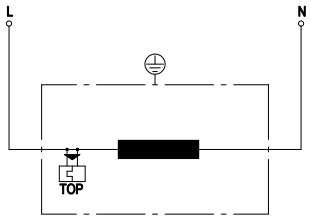

L	= black
N	= black
TOP	= Thermal overload protector

ebm-papst Mulfingen GmbH & Co. KG · Bachmühle 2 · 74673 Mulfingen · Phone: +49 7938 81-0 · Fax: +49 7938 81-110 · www.ebmpapst.com · info1@de.ebmpapst.com

Charts: Air flow 50 Hz

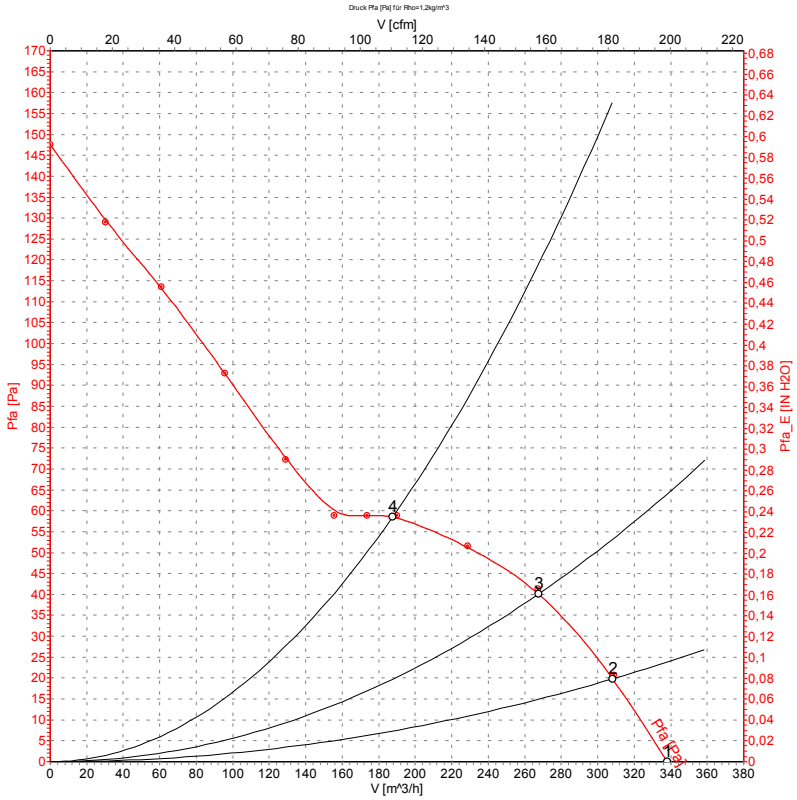

Measurement: LU-58475

Measured values

	U	f	n	P_1	I	$\dot{V}$	p_{fa}
	[V]	[Hz]	[min^{-1}]	[W]	[A]	[m^3/h]	[Pa]
1	230	50	2800	45	0.31	340	0
2	230	50	2795	45	0.31	310	20
3	230	50	2780	46	0.31	270	40
4	230	50	2780	46	0.31	190	59

ebm-papst Mulfingen GmbH & Co. KG · Bachmühle 2 · 74673 Mulfingen · Phone: +49 7938 81-0 · Fax: +49 7938 81-110 · www.ebmpapst.com · info1@de.ebmpapst.com

Charts: Air flow 60 Hz

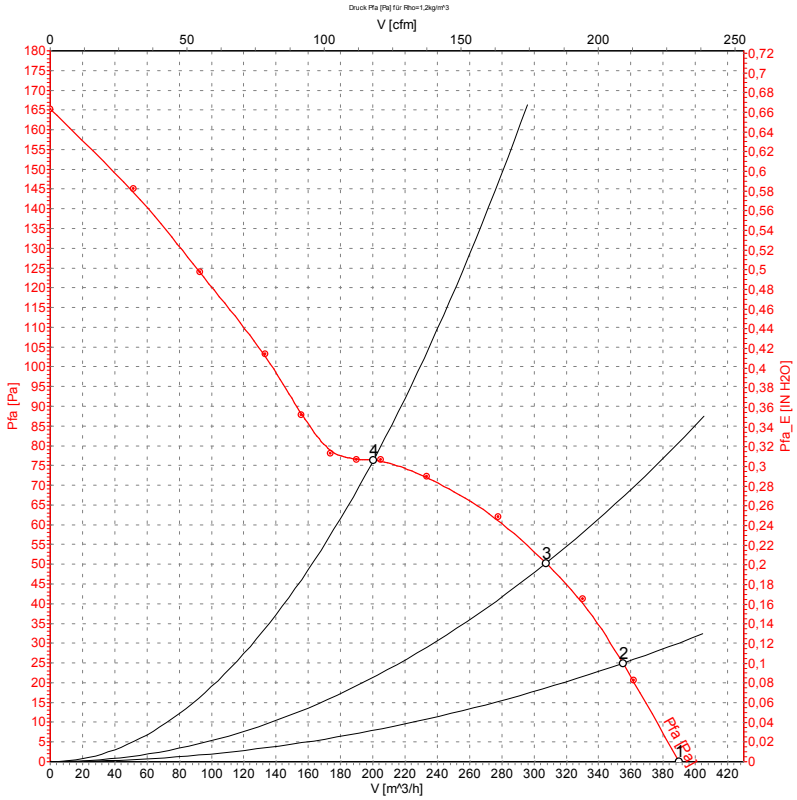

Measurement: LU-58476

Measured values

	U	f	n	P_1	I	$\dot{V}$	p_{fa}
	[V]	[Hz]	[min^{-1}]	[W]	[A]	[m^3/h]	[Pa]
1	230	60	3250	39	0.25	390	0
2	230	60	3200	42	0.25	355	25
3	230	60	3165	43	0.26	305	50
4	230	60	3170	43	0.26	200	75

ebm-papst Mulfingen GmbH & Co. KG · Bachmühle 2 · 74673 Mulfingen · Phone: +49 7938 81-0 · Fax: +49 7938 81-110 · www.ebmpapst.com · info1@de.ebmpapst.com