AC axial fan

ebm-papst Mulfingen GmbH & Co. KG
Bachmühle 2
D-74673 Mulfingen
Phone +49 7938 81-0
Fax +49 7938 81-110
info1@de.ebmpapst.com
www.ebmpapst.com

Nominal data

Type	**A2S130-AB03-11**
Motor	**M2S052-CA**

Phase		1~	1~
Nominal voltage	VAC	230	230
Frequency	Hz	50	60
Type of data definition		rfa	rfa
Valid for approval / standard		CE	CE
Speed	min^{-1}	2800	3250
Power input	W	45	39
Current draw	A	0.3	0.25
Max. ambient temperature	°C	-	-

ml = max. load · me = max. efficiency · rfa = running at free air · cs = customer specs · cu = customer unit
Subject to alterations

Technical features

Leackage current	< 0.75 mA
Size	130 mm
Operation mode	S1
Direction of rotation	Counter-clockwise, seen on rotor
Mounting position	Any
Direction of air flow	"V"
Insulation class	"B"
Cable exit	Variable
Condensate discharge holes	None
Motor bearing	Ball bearing
Mass	0.9 kg
Material of blades	Sheet steel, coated in black
Motor protection	Thermal overload protector (TOP) wired internally
Product conforming to standard	CE; EN 60335-1
Surface of rotor	Coated in black
Number of blades	7
Type of protection	IP 44
Protection class	I (if earth wire is connected by customer)
Max. permissible ambient motor temp. (transp./ storage)	+ 80 °C
Min. permissible ambient motor temp. (transp./storage)	- 40 °C
Approval	CCC; CSA C22.2 Nr.100; UL 1004-1

AC axial fan

Product drawing

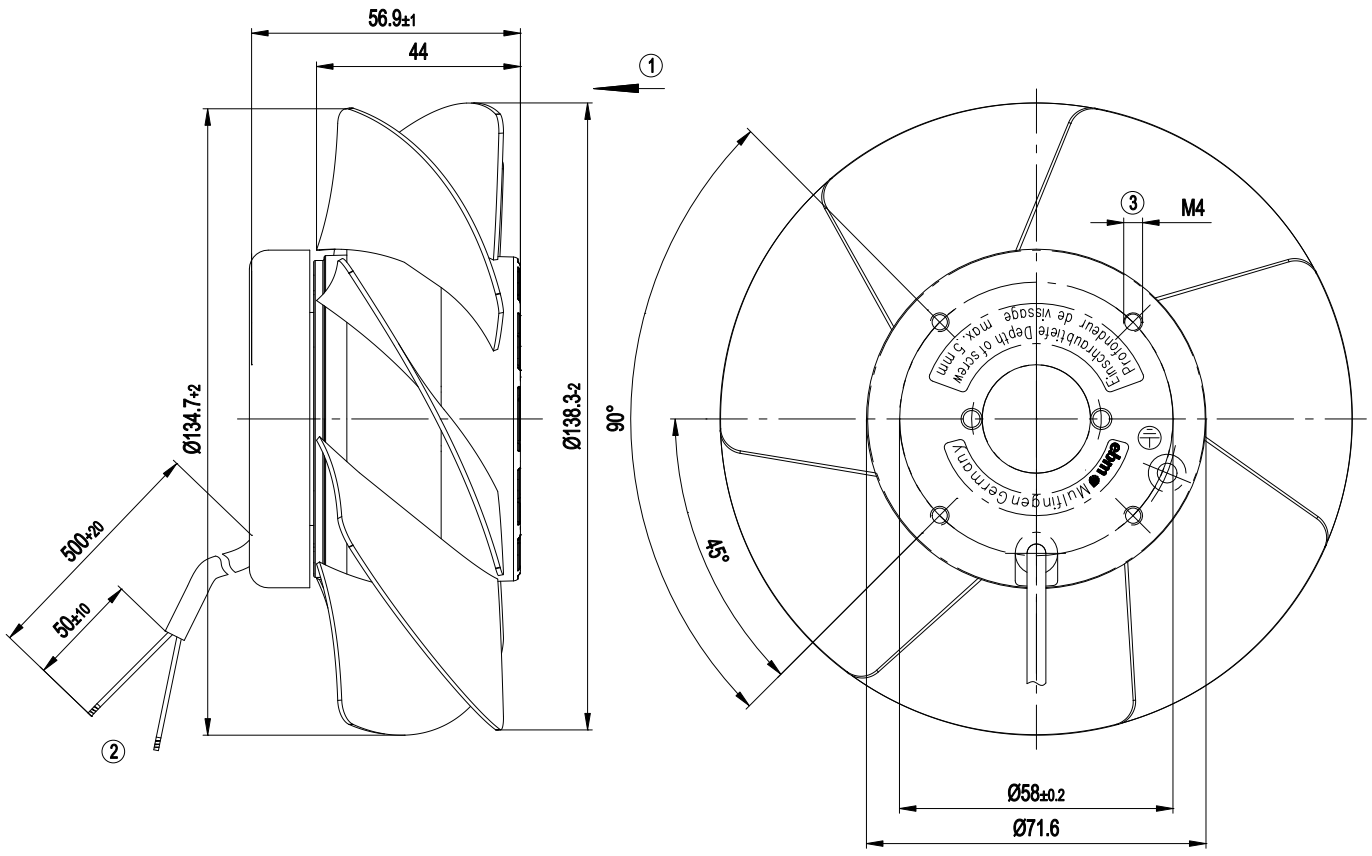

1	Direction of air flow "V"
2	Connection line AWG 20, 2x crimped core-end sleeves
3	Depth of screw max. 5 mm

Connection screen

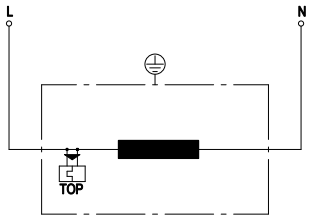

L	= black
N	= black
TOP	= Thermal overload protector

ebm-papst Mulfingen GmbH & Co. KG · Bachmühle 2 · D-74673 Mulfingen · Phone +49 7938 81-0 · Fax +49 7938 81-110 · info1@de.ebmpapst.com · www.ebmpapst.com

AC axial fan

Charts: Air flow 50 Hz

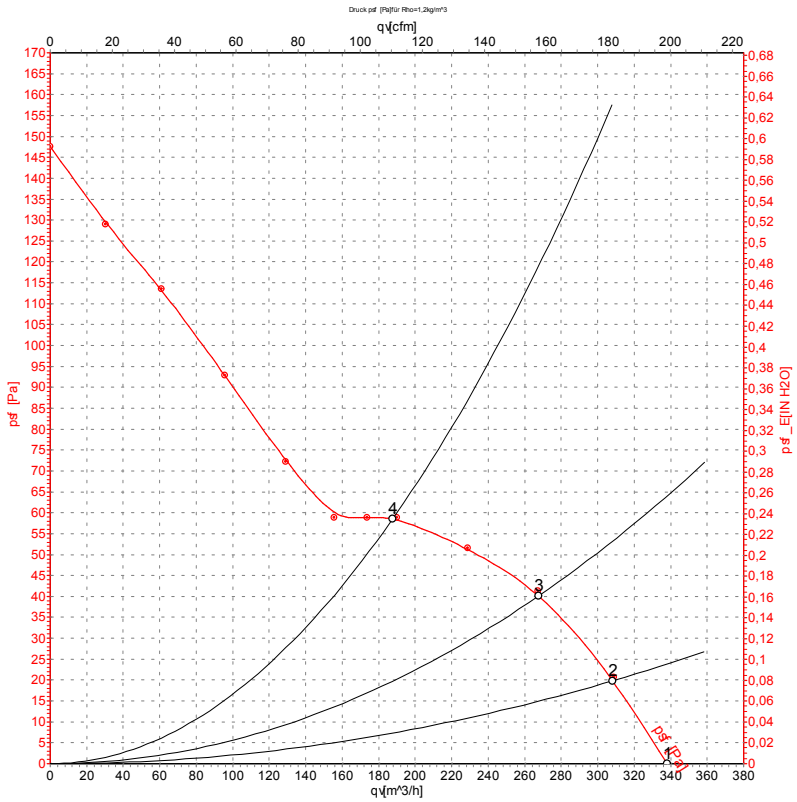

Measurement: LU-58475

Air performance measured as per ISO 5801 Installation Category A. For detailed information on the measuring set-up, please contact ebm-papst. Suction-side noise levels: LwA measured as per ISO 13347 / LpA measured with 1m distance to fan axis. The values given are valid under the measuring conditions mentioned above and may vary according to the actual installation situation. With any deviation from the standard set-up, the specific values have to be checked and reviewed with the unit installed.

Measured values

	U	f	n	P_e	I	qv	p_{sf}
	V	Hz	min^{-1}	W	A	m^3/h	Pa
1	230	50	2800	45	0.31	340	0
2	230	50	2795	45	0.31	310	20
3	230	50	2780	46	0.31	270	40
4	230	50	2780	46	0.31	190	59

ebm-papst Mulfingen GmbH & Co. KG · Bachmühle 2 · D-74673 Mulfingen · Phone +49 7938 81-0 · Fax +49 7938 81-110 · info1@de.ebmpapst.com · www.ebmpapst.com

AC axial fan

Charts: Air flow 60 Hz

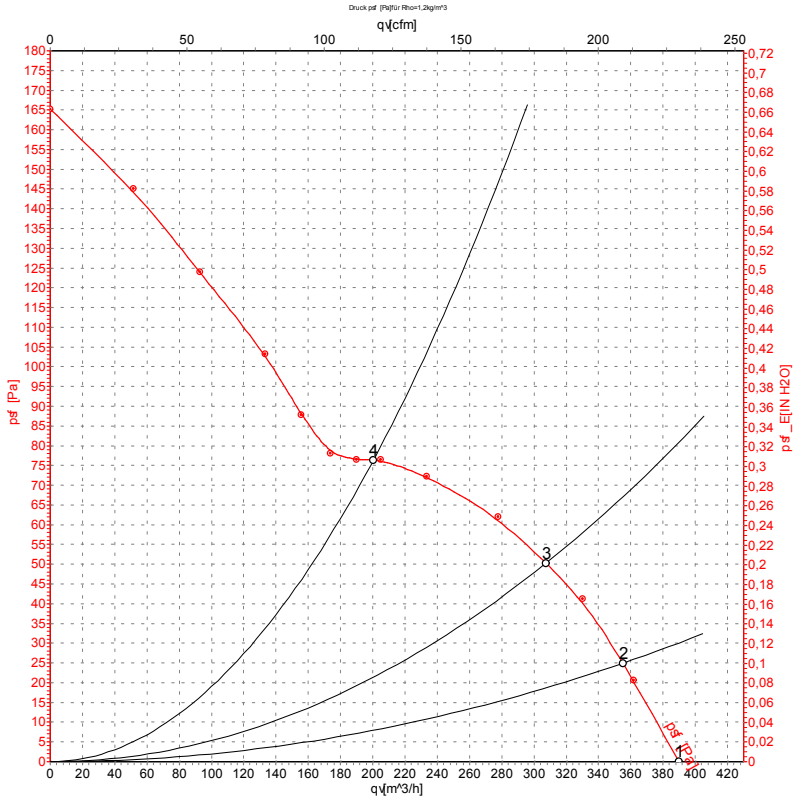

Measurement: LU-58476

Air performance measured as per ISO 5801 Installation Category A. For detailed information on the measuring set-up, please contact ebm-papst. Suction-side noise levels: LwA measured as per ISO 13347 / LpA measured with 1m distance to fan axis. The values given are valid under the measuring conditions mentioned above and may vary according to the actual installation situation. With any deviation from the standard set-up, the specific values have to be checked and reviewed with the unit installed.

Measured values

	U	f	n	P_e	I	qv	p_{sf}
	V	Hz	min^{-1}	W	A	m^3/h	Pa
1	230	60	3250	39	0.25	390	0
2	230	60	3200	42	0.25	355	25
3	230	60	3165	43	0.26	305	50
4	230	60	3170	43	0.26	200	75

ebm-papst Mulfingen GmbH & Co. KG · Bachmühle 2 · D-74673 Mulfingen · Phone +49 7938 81-0 · Fax +49 7938 81-110 · info1@de.ebmpapst.com · www.ebmpapst.com