**A4D300-AP28-02**

# AC axial fan

sickled blades (S series)

**ebm-papst Mulfingen GmbH & Co. KG**
Bachmühle 2 · D-74673 Mulfingen
Phone +49 7938 81-0
Fax +49 7938 81-110
info1@de.ebmpapst.com
www.ebmpapst.com

Limited partnership · Headquarters Mulfingen
County court Stuttgart · HRA 590344

General partner: Elektrobau Mulfingen GmbH · Headquarters Mulfingen
County court Stuttgart · HRB 590142

## Nominal data

| | |
|---|---|
| **Type** | **A4D300-AP28-02** |
| **Motor** | **M4D068-CF** |

| | | | | | |
|---|---|---|---|---|---|
| Phase | | 3~ | 3~ | 3~ | 3~ |
| Nominal voltage | VAC | 230 | 230 | 400 | 400 |
| Connection | | **Δ** | **Δ** | Y | Y |
| Frequency | Hz | 50 | 60 | 50 | 60 |
| Type of data definition | | fa | fa | fa | fa |
| Valid for approval / standard | | CE | CE | CE | CE |
| Speed | $min^{-1}$ | 1370 | 1540 | 1370 | 1540 |
| Power input | W | 60 | 75 | 60 | 75 |
| Current draw | A | 0.29 | 0.26 | 0.17 | 0.15 |
| Max. back pressure | Pa | 90 | 60 | 90 | 60 |
| Max. ambient temperature | °C | 45 | 40 | 45 | 40 |

ml = max. load · me = max. efficiency · fa = running at free air · cs = customer specs · cu = customer unit
Subject to alterations

# AC axial fan

sickled blades (S series)

## Technical features

| | |
|---|---|
| **Mass** | 2.1 kg |
| **Size** | 300 mm |
| **Surface of rotor** | Coated in black |
| **Material of blades** | Sheet steel, coated in black |
| **Number of blades** | 5 |
| **Direction of air flow** | "A" |
| **Direction of rotation** | Clockwise, seen on rotor |
| **Type of protection** | IP 44 |
| **Insulation class** | "B" |
| **Humidity class** | F1-2 |
| **Max. permissible ambient motor temp. (transp./ storage)** | + 80 °C |
| **Min. permissible ambient motor temp. (transp./storage)** | - 40 °C |
| **Mounting position** | Shaft horizontal or rotor on bottom; rotor on top on request |
| **Condensate discharge holes** | Rotor-side |
| **Operation mode** | S1 |
| **Motor bearing** | Ball bearing |
| **Leakage current** | < 0.75 mA |
| **Cable exit** | Axial |
| **Protection class** | I (if protective earth is connected by customer) |
| **Product conforming to standard** | EN 60335-1 |
| **Approval** | CCC |



ebm-papst Mulfingen GmbH & Co. KG · Bachmühle 2 · D-74673 Mulfingen · Phone +49 7938 81-0 · Fax +49 7938 81-110 · info1@de.ebmpapst.com · www.ebmpapst.com

# AC axial fan

sickled blades (S series)

## Product drawing

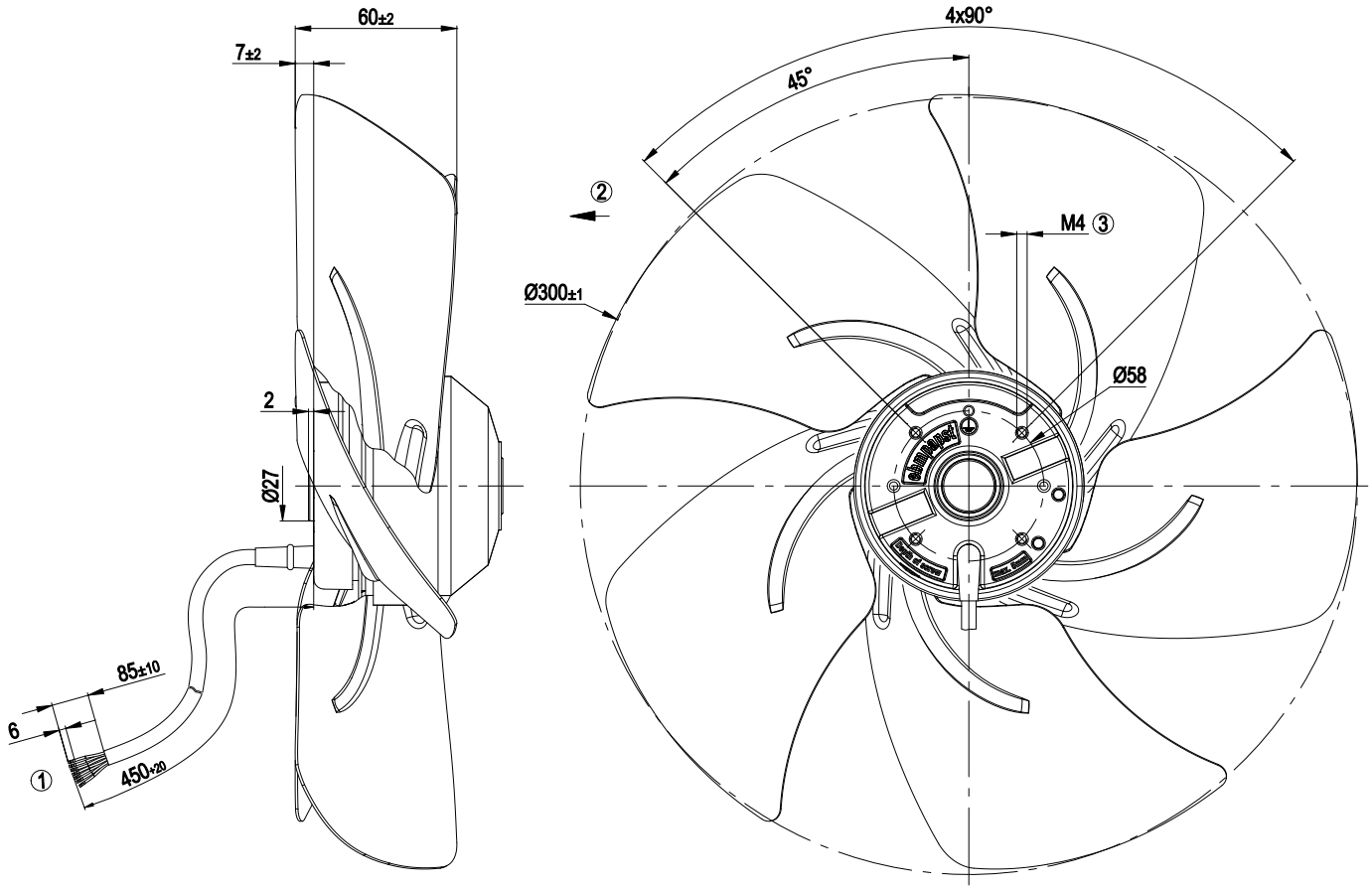


| | |
|---|---|
| 1 | Connection line PVC, 7x brass lead tips crimped |
| 2 | Direction of air flow "A" |
| 3 | Depth of screw max. 5 mm |



ebm-papst Mulfingen GmbH & Co. KG · Bachmühle 2 · D-74673 Mulfingen · Phone +49 7938 81-0 · Fax +49 7938 81-110 · info1@de.ebmpapst.com · www.ebmpapst.com

# AC axial fan

sickled blades (S series)

## Connection screen

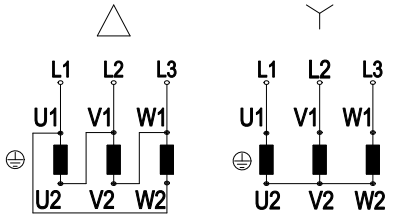


Note: Direction of rotation changes when two phases are reversed

| | | | | | |
|---|---|---|---|---|---|
| Δ | Delta connection | Y | Star connection | L1 | black |
| L2 | blue | L3 | brown | U1 | black |
| V1 | blue | W1 | brown | U2 | green |
| V2 | white | W2 | yellow | | |



ebm-papst Mulfingen GmbH & Co. KG · Bachmühle 2 · D-74673 Mulfingen · Phone +49 7938 81-0 · Fax +49 7938 81-110 · info1@de.ebmpapst.com · www.ebmpapst.com

# AC axial fan

sickled blades (S series)

## Charts: Air flow 50 Hz

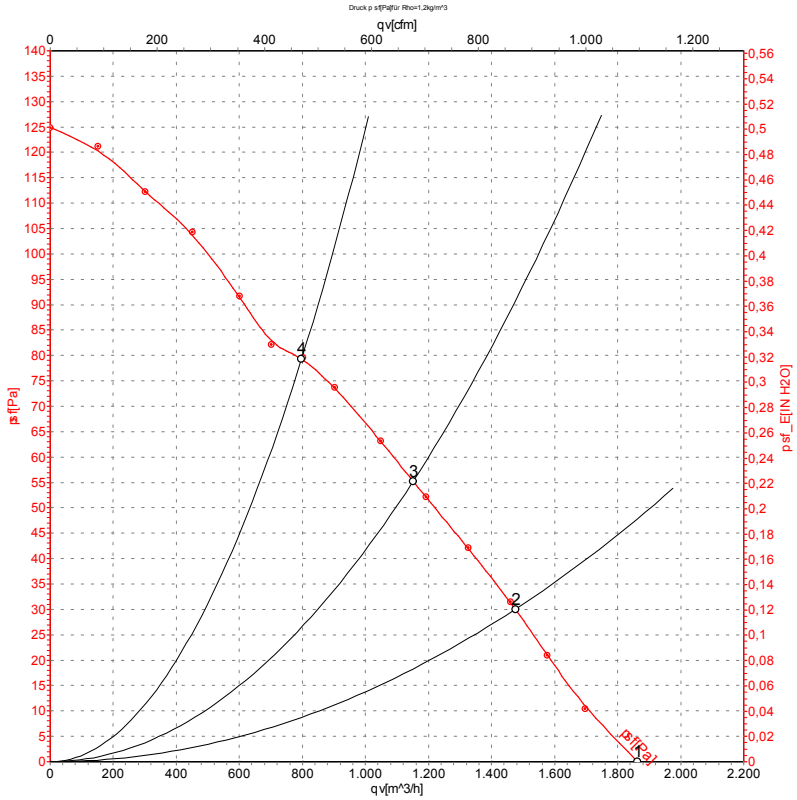


Measurement: LU-60318

Air performance measured as per ISO 5801 Installation category A. For detailed information on the measuring set-up, please contact ebm-papst. Suction-side noise levels: LwA measured as per ISO 13347 / LpA measured with 1m distance to fan axis. The values given are valid under the measuring conditions mentioned above and may vary according to the actual installation situation. With any deviation from the standard set-up, the specific values have to be checked and reviewed with the unit installed.

## Measured values

| | U | f | n | $P_e$ | I | qv | $p_{sf}$ |
|---|---|---|---|---|---|---|---|
| | V | Hz | $min^{-1}$ | W | A | $m^3/h$ | Pa |
| 1 | 400 | 50 | 1370 | 60 | 0.17 | 1860 | 0 |
| 2 | 400 | 50 | 1350 | 67 | 0.17 | 1475 | 30 |
| 3 | 400 | 50 | 1330 | 73 | 0.18 | 1150 | 55 |
| 4 | 400 | 50 | 1270 | 87 | 0.19 | 795 | 80 |



ebm-papst Mulfingen GmbH & Co. KG · Bachmühle 2 · D-74673 Mulfingen · Phone +49 7938 81-0 · Fax +49 7938 81-110 · info1@de.ebmpapst.com · www.ebmpapst.com

# AC axial fan

sickled blades (S series)

## Charts: Air flow 60 Hz

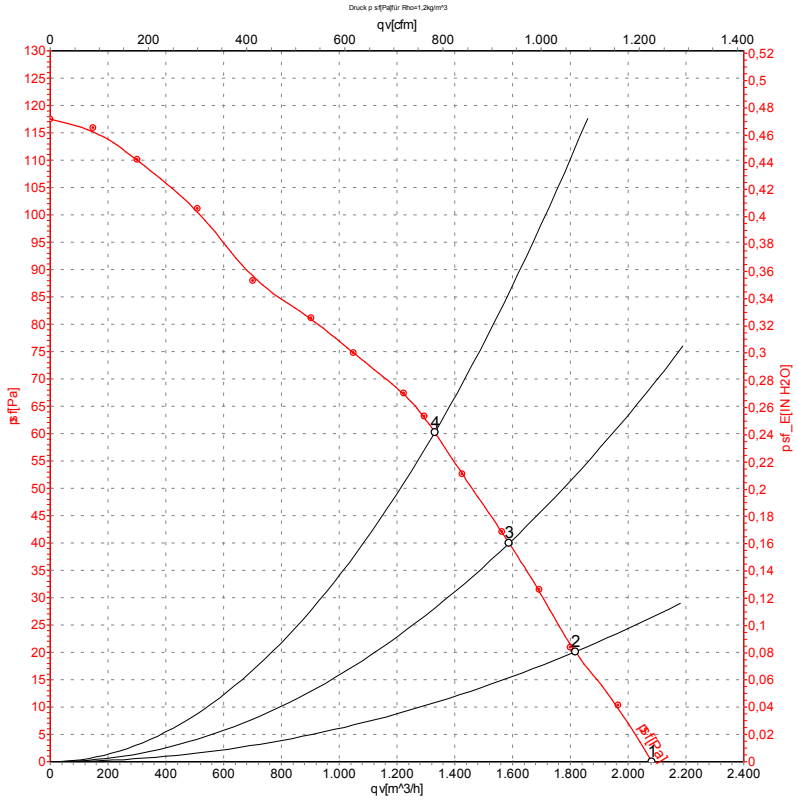


Measurement: LU-60319

Air performance measured as per ISO 5801 Installation category A. For detailed information on the measuring set-up, please contact ebm-papst. Suction-side noise levels: LwA measured as per ISO 13347 / LpA measured with 1m distance to fan axis. The values given are valid under the measuring conditions mentioned above and may vary according to the actual installation situation. With any deviation from the standard set-up, the specific values have to be checked and reviewed with the unit installed.

## Measured values

| | U | f | n | $P_e$ | I | qv | $p_{sf}$ |
|---|---|---|---|---|---|---|---|
| | V | Hz | $min^{-1}$ | W | A | $m^3/h$ | Pa |
| 1 | 400 | 60 | 1540 | 75 | 0.15 | 2080 | 0 |
| 2 | 400 | 60 | 1515 | 80 | 0.16 | 1815 | 20 |
| 3 | 400 | 60 | 1490 | 85 | 0.17 | 1590 | 40 |
| 4 | 400 | 60 | 1455 | 91 | 0.17 | 1330 | 60 |



ebm-papst Mulfingen GmbH & Co. KG · Bachmühle 2 · D-74673 Mulfingen · Phone +49 7938 81-0 · Fax +49 7938 81-110 · info1@de.ebmpapst.com · www.ebmpapst.com