A4D350-AA06-01

AC axial fan

straight blades (A series)



ebm-papst Mulfingen GmbH & Co. KG
Bachmühle 2 · D-74673 Mulfingen
Phone +49 7938 81-0
Fax +49 7938 81-110
info1@de.ebmpapst.com
www.ebmpapst.com

Limited partnership · Headquarters Mulfingen
County court Stuttgart · HRA 590344

General partner: Elektrobau Mulfingen GmbH · Headquarters Mulfingen
County court Stuttgart · HRB 590142

ErP2015 EXCEEDS THE NORM

Nominal data

Type	**A4D350-AA06-01**
Motor	**M4D068-EC**

Phase		3~	3~	3~	3~
Nominal voltage	VAC	230	230	400	400
Connection		**Δ**	**Δ**	Y	Y
Frequency	Hz	50	60	50	60
Type of data definition		fa	fa	fa	fa
Valid for approval / standard		CE	CE	CE	CE
Speed	min^{-1}	1420	1620	1420	1620
Power input	W	145	190	145	190
Current draw	A	0.68	0.62	0.39	0.36
Max. back pressure	Pa	150	150	150	150
Max. ambient temperature	°C	50	50	50	50

ml = max. load · me = max. efficiency · fa = running at free air · cs = customer specs · cu = customer unit
Subject to alterations

Data according to ErP directive

Installation category	A
Efficiency category	Static
Variable speed drive integrated	No
Specific ratio*	1,00

* Specific ratio = 1 + p_{fs} / 100 000 Pa

		Actual	Request 2013	Request 2015
Overall efficiency η_{es}		28,5	24,5	28,5
Efficiency grade N		40	36	40
Power input P_e	kW	0,15		
Air flow q_v	m^3/h	2015		
Pressure increase p_{fs}	Pa	75		
Speed n	min^{-1}	1390		

Data established at point of optimum efficiency

AC axial fan

straight blades (A series)

Technical features

Mass	3.1 kg
Size	350 mm
Surface of rotor	Coated in black
Material of impeller	Sheet steel, coated in black
Number of blades	5
Direction of air flow	"V"
Direction of rotation	Counter-clockwise, seen on rotor
Type of protection	IP 44; Depending on installation and position as per EN 60034-5
Insulation class	"B"
Humidity class	F1-2
Max. permissible ambient motor temp. (transp./ storage)	+ 80 °C
Min. permissible ambient motor temp. (transp./storage)	- 40 °C
Mounting position	Shaft horizontal or rotor on bottom; rotor on top on request
Condensate discharge holes	Rotor-side
Operation mode	S1
Motor bearing	Ball bearing
Leakage current	< 0.75 mA
Cable exit	Lateral
Protection class	I (if protective earth is connected by customer)
Product conforming to standard	EN 60335-1

ebm-papst Mulfingen GmbH & Co. KG · Bachmühle 2 · D-74673 Mulfingen · Phone +49 7938 81-0 · Fax +49 7938 81-110 · info1@de.ebmpapst.com · www.ebmpapst.com

AC axial fan

straight blades (A series)

Product drawing

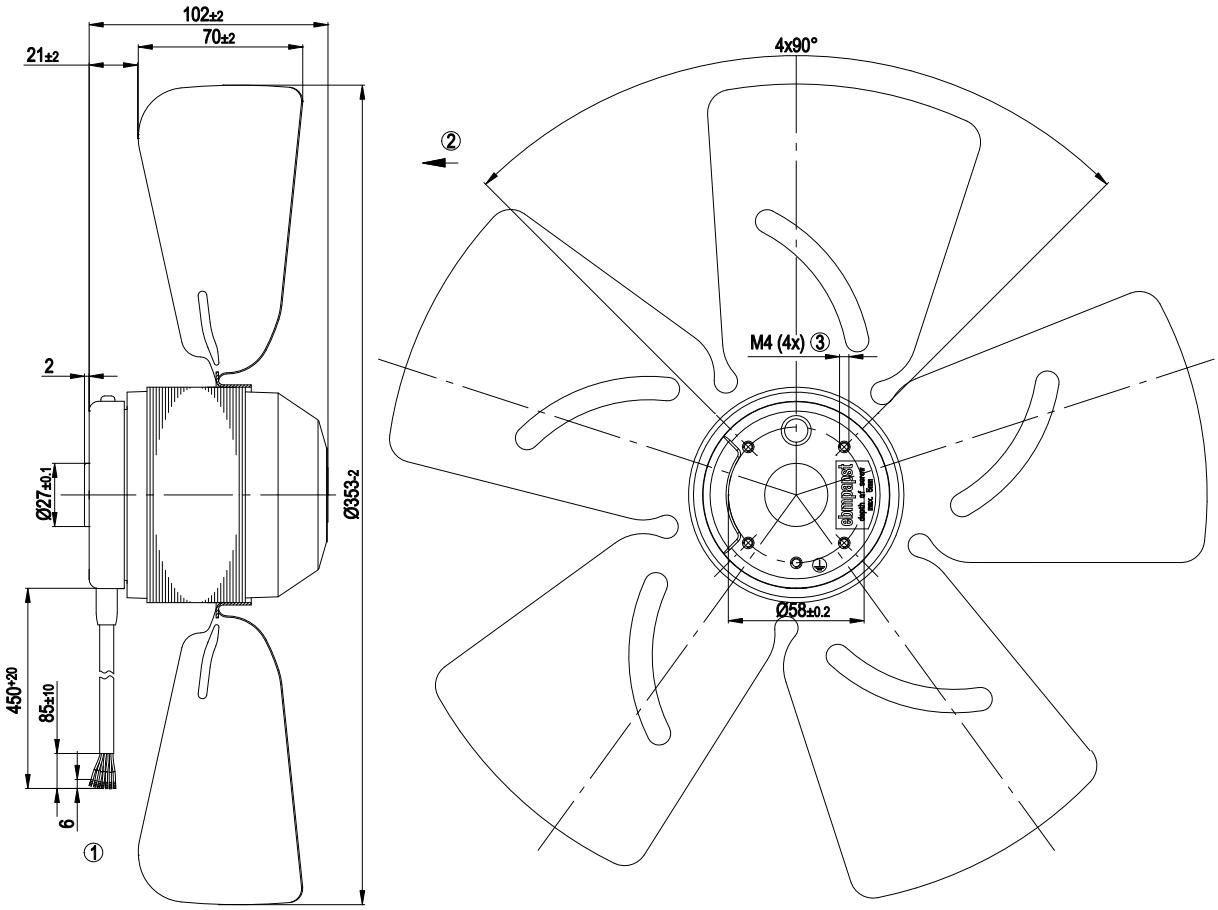

1	Connection line PVC 7G 0.5 mm², 7x brass lead tips crimped
2	Direction of air flow "V"
3	Depth of screw max. 5 mm

ebm-papst Mulfingen GmbH & Co. KG · Bachmühle 2 · D-74673 Mulfingen · Phone +49 7938 81-0 · Fax +49 7938 81-110 · info1@de.ebmpapst.com · www.ebmpapst.com

AC axial fan

straight blades (A series)

Connection screen

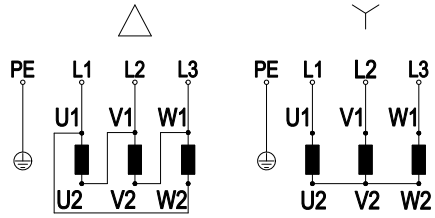

Note: Direction of rotation changes when two phases are reversed

Δ	Delta connection	Y	Star connection	L1	black
L2	blue	L3	brown	U1	black
V1	blue	W1	brown	U2	green
V2	white	W2	yellow	PE	green/yellow

ebm-papst Mulfingen GmbH & Co. KG · Bachmühle 2 · D-74673 Mulfingen · Phone +49 7938 81-0 · Fax +49 7938 81-110 · info1@de.ebmpapst.com · www.ebmpapst.com

AC axial fan

straight blades (A series)

Charts: Air flow 50 Hz

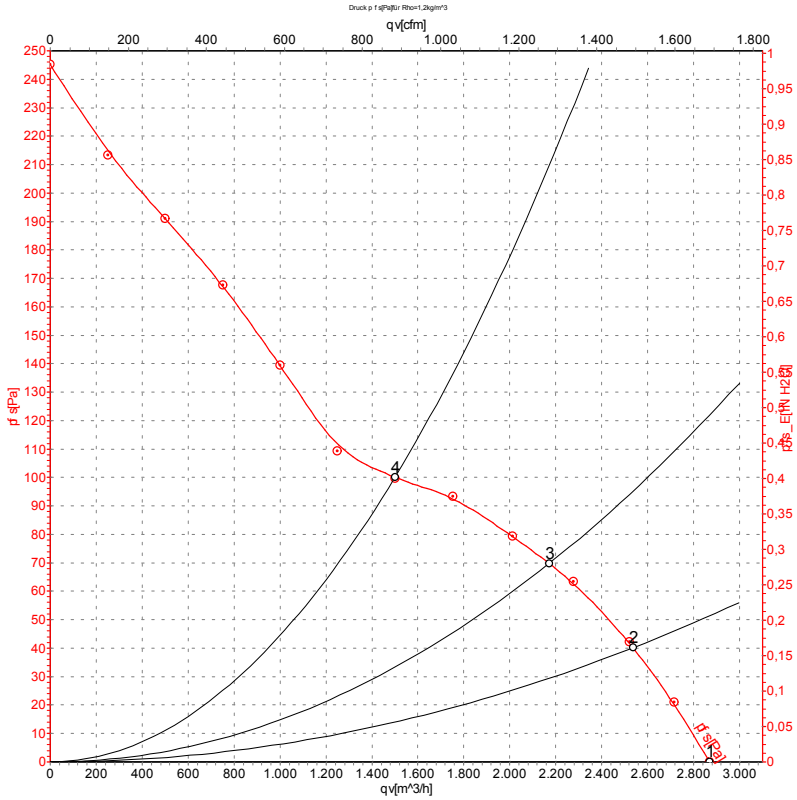

Measurement: LU-64797

Air performance measured as per ISO 5801 Installation category A. For detailed information on the measuring set-up, please contact ebm-papst. Suction-side noise levels: LwA measured as per ISO 13347 / LpA measured with 1m distance to fan axis. The values given are valid under the measuring conditions mentioned above and may vary according to the actual installation situation. With any deviation from the standard set-up, the specific values have to be checked and reviewed with the unit installed.

Measured values

	U	f	n	P_e	I	qv	p_{fs}
	V	Hz	min^{-1}	W	A	m^3/h	Pa
1	400	50	1420	128	0.39	2870	0
2	400	50	1405	141	0.40	2535	40
3	400	50	1395	150	0.41	2170	70
4	400	50	1385	158	0.41	1500	100

ebm-papst Mulfingen GmbH & Co. KG · Bachmühle 2 · D-74673 Mulfingen · Phone +49 7938 81-0 · Fax +49 7938 81-110 · info1@de.ebmpapst.com · www.ebmpapst.com

AC axial fan

straight blades (A series)

Charts: Air flow 60 Hz

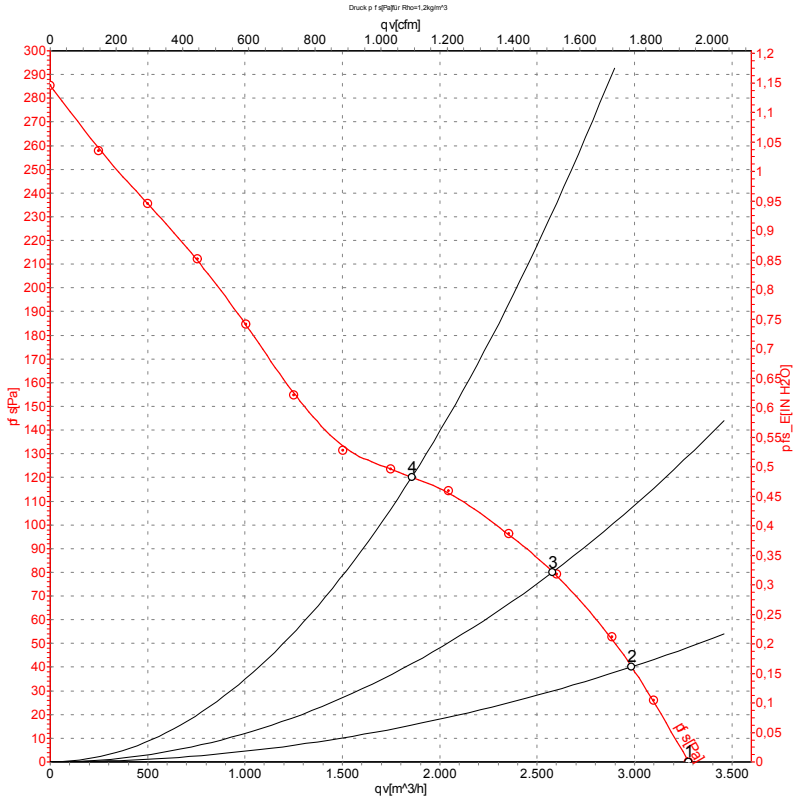

Measurement: LU-64798

Air performance measured as per ISO 5801 Installation category A. For detailed information on the measuring set-up, please contact ebm-papst. Suction-side noise levels: LwA measured as per ISO 13347 / LpA measured with 1m distance to fan axis. The values given are valid under the measuring conditions mentioned above and may vary according to the actual installation situation. With any deviation from the standard set-up, the specific values have to be checked and reviewed with the unit installed.

Measured values

	U	f	n	P_e	I	qv	p_{fs}
	V	Hz	min^{-1}	W	A	m^3/h	Pa
1	400	60	1620	169	0.36	3280	0
2	400	60	1605	185	0.36	2985	40
3	400	60	1580	202	0.38	2580	80
4	400	60	1560	217	0.39	1855	120

ebm-papst Mulfingen GmbH & Co. KG · Bachmühle 2 · D-74673 Mulfingen · Phone +49 7938 81-0 · Fax +49 7938 81-110 · info1@de.ebmpapst.com · www.ebmpapst.com