**A4D400-AM02-01**

# AC axial fan

sickled blades (S series)

**ebm-papst Mulfingen GmbH & Co. KG**
Bachmühle 2 · D-74673 Mulfingen
Phone +49 7938 81-0
Fax +49 7938 81-110
info1@de.ebmpapst.com
www.ebmpapst.com

Limited partnership · Headquarters Mulfingen
County court Stuttgart · HRA 590344

General partner Elektrobau Mulfingen GmbH · Headquarters Mulfingen
County court Stuttgart · HRB 590142

ErP2013 EXCEEDS THE NORM

## Nominal data

| | |
|---|---|
| **Type** | **A4D400-AM02-01** |
| **Motor** | **M4D094-EA** |

| | | | | | | | |
|---|---|---|---|---|---|---|---|
| Phase | | 3~ | 3~ | 3~ | 3~ | 3~ | 3~ |
| Nominal voltage | VAC | 400 | 400 | 400 | 400 | 480 | 480 |
| Connection | | Δ | Y | Δ | Y | Δ | Y |
| Frequency | Hz | 50 | 50 | 60 | 60 | 60 | 60 |
| Type of data definition | | ml | ml | ml | ml | ml | ml |
| Valid for approval / standard | | CE | CE | CE | CE | CE | CE |
| Speed | $min^{-1}$ | 1315 | 995 | 1415 | 900 | 1525 | 1080 |
| Power input | W | 290 | 190 | 410 | 220 | 450 | 280 |
| Current draw | A | 0.53 | 0.31 | 0.68 | 0.37 | 0.66 | 0.39 |
| Max. back pressure | Pa | 100 | 55 | 110 | 45 | 130 | 60 |
| Min. ambient temperature | °C | -40 | -40 | -40 | -40 | -40 | -40 |
| Max. ambient temperature | °C | 65 | 65 | 55 | 55 | 55 | 55 |
| Starting current | A | 1.7 | 0.55 | 1.57 | 0.51 | 1.95 | 0.65 |

ml = Max. load · me = Max. efficiency · fa = Running at free air · cs = Customer specs · cu = Customer unit
Subject to alterations

## Data according to ErP directive

| | |
|---|---|
| Installation category | A |
| Efficiency category | Static |
| Variable speed drive | No |
| Specific ratio* | 1.00 |

* Specific ratio = 1 + $p_{fs}$ / 100 000 Pa

| | | Actual | Request 2013 | Request 2015 |
|---|---|---|---|---|
| Overall efficiency $\eta_{es}$ | | 27.7 | 26.2 | 30.2 |
| Efficiency grade N | | 37.5 | 36 | 40 |
| Power input $P_e$ | kW | 0.28 | | |
| Air flow $q_v$ | $m^3/h$ | 2840 | | |
| Pressure increase $p_{fs}$ | Pa | 100 | | |
| Speed n | $min^{-1}$ | 1320 | | |

Data established at point of optimum efficiency



ebmpapst

# AC axial fan

sickled blades (S series)

## Technical features

| | |
|---|---|
| **Mass** | 4.7 kg |
| **Size** | 400 mm |
| **Surface of rotor** | Coated in black |
| **Material of blades** | PP plastic |
| **Number of blades** | 5 |
| **Direction of air flow** | "V" |
| **Direction of rotation** | Counter-clockwise, seen on rotor |
| **Type of protection** | IP 54; Depending on installation and position as per EN 60034-1 |
| **Insulation class** | "F" |
| **Humidity class** | F4-1 |
| **Max. permissible ambient motor temp. (transp./ storage)** | + 80 °C |
| **Min. permissible ambient motor temp. (transp./storage)** | - 40 °C |
| **Mounting position** | Shaft horizontal or rotor on bottom; rotor on top on request |
| **Condensate discharge holes** | Rotor-side |
| **Operation mode** | S1 |
| **Motor bearing** | Ball bearing |
| **Touch current acc. IEC 60990 (measuring network Fig. 4, TN system)** | <= 3.5 mA |
| **Electrical leads** | Via terminal box |
| **Motor protection** | Thermal overload protector (TOP) brought out |
| **Protection class** | I (if protective earth is connected by customer) |
| **Product conforming to standard** | EN 60034; CE |



ebm-papst Mulfingen GmbH & Co. KG · Bachmühle 2 · D-74673 Mulfingen · Phone +49 (0) 7938 81-0 · Fax +49 (0) 7938 81-110 · info1@de.ebmpapst.com · www.ebmpapst.com

# AC axial fan

sickled blades (S series)

## Product drawing

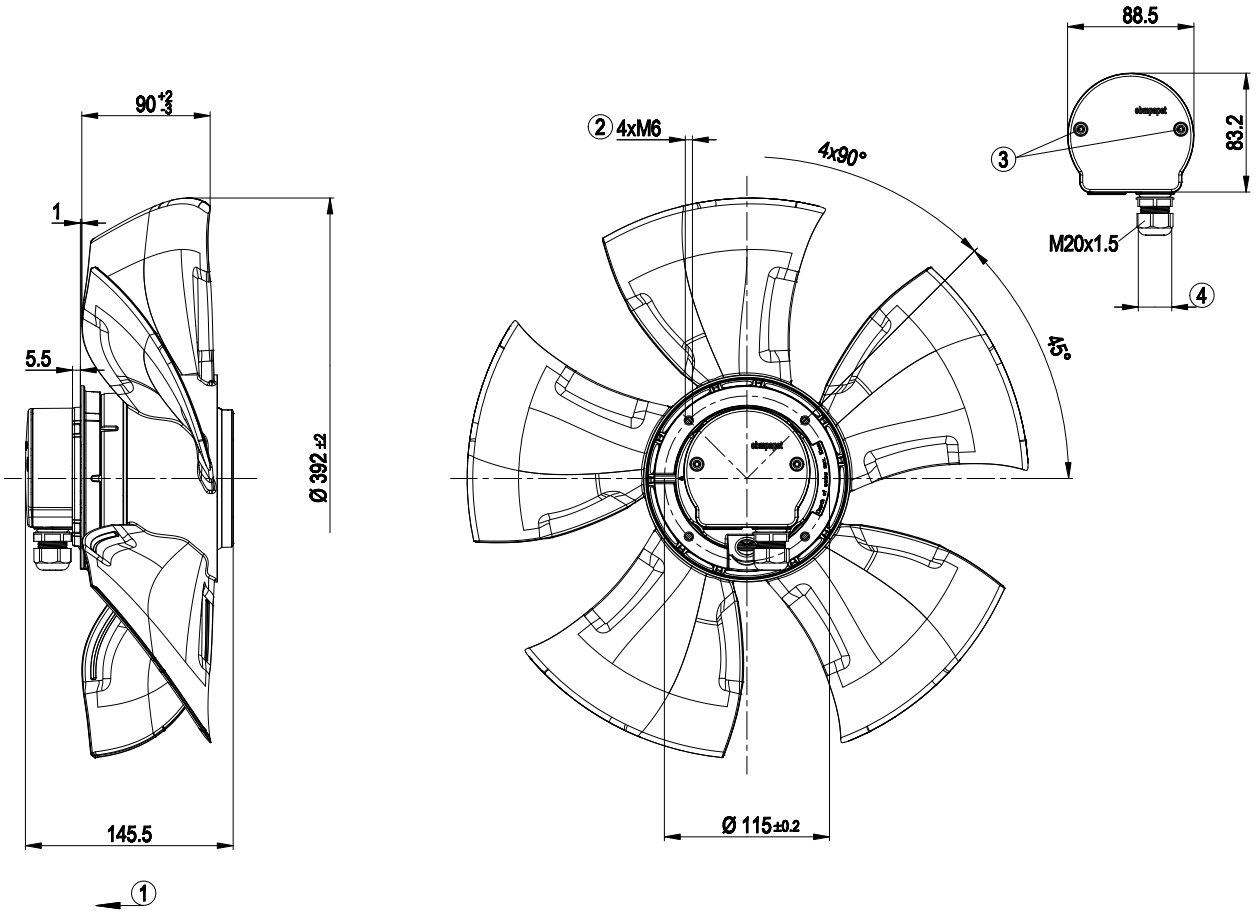


| | |
|---|---|
| 1 | Direction of air flow "V" |
| 2 | Depth of screw max. 10 mm |
| 3 | Tightening torque 1.0 ± 0.15 Nm |
| 4 | Cable diameter: min. 4 mm, max. 10 mm, tightening torque: 2±0.3 Nm |



ebm-papst Mulfingen GmbH & Co. KG · Bachmühle 2 · D-74673 Mulfingen · Phone +49 (0) 7938 81-0 · Fax +49 (0) 7938 81-110 · info1@de.ebmpapst.com · www.ebmpapst.com

# AC axial fan

sickled blades (S series)

## Connection screen

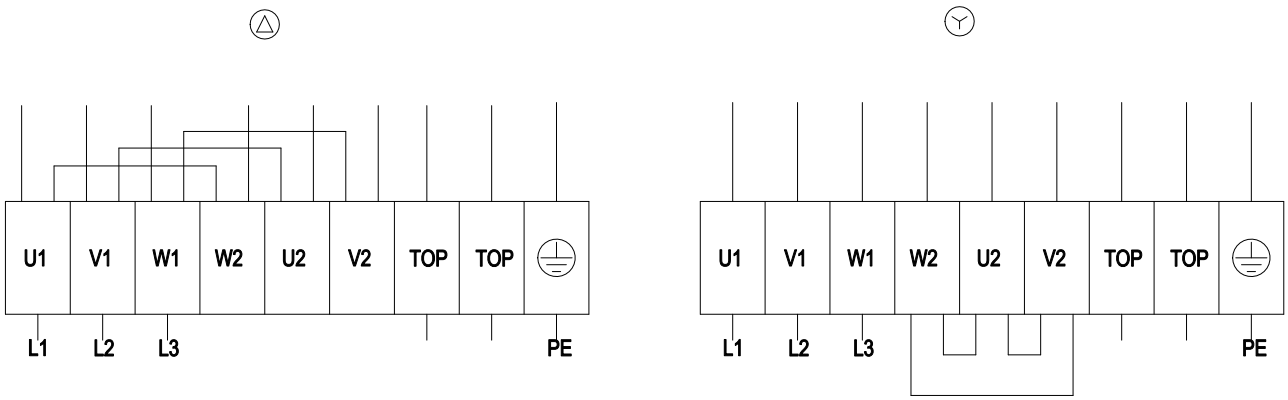


| | | | | | |
|---|---|---|---|---|---|
| Δ | Delta-connection | Y | Star connection | L1 | = U1 = black |
| L2 | = V1 = blue | L3 | = W1 = brown | W2 | yellow |
| U2 | green | V2 | white | TOP | 2 x grey |
| PE | green / yellow | | | | |



ebm-papst Mulfingen GmbH & Co. KG · Bachmühle 2 · D-74673 Mulfingen · Phone +49 (0) 7938 81-0 · Fax +49 (0) 7938 81-110 · info1@de.ebmpapst.com · www.ebmpapst.com

# AC axial fan

sickled blades (S series)

## Charts: Air flow 50 Hz

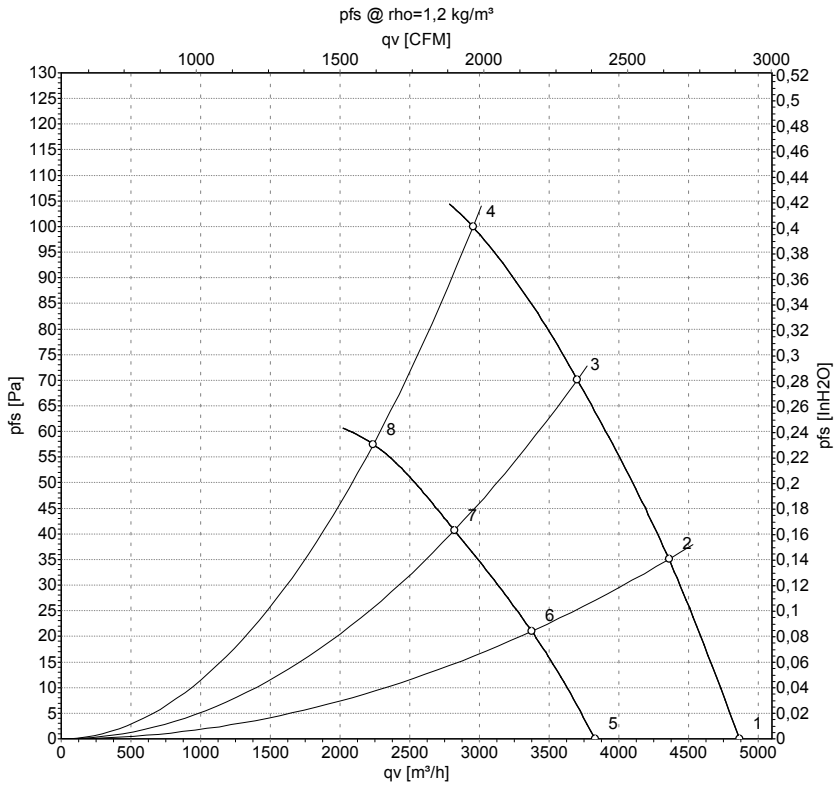


Measurement: LU-108747
Measurement: LU-108754

Air performance measured as per ISO 5801 Installation category A. For detailed information on the measuring set-up, please contact ebm-papst. Suction-side noise levels: LwA measured as per ISO 13347 / LpA measured with 1m distance to fan axis. The values given are valid under the measuring conditions mentioned above and may vary according to the actual installation situation. With any deviation from the standard set-up, the specific values have to be checked and reviewed with the unit installed.

## Measured values

| | Conn. | U | f | n | $P_e$ | I | qv | $p_{fs}$ |
|---|---|---|---|---|---|---|---|---|
| | | V | Hz | $min^{-1}$ | W | A | $m^3/h$ | Pa |
| 1 | Δ | 400 | 50 | 1355 | 240 | 0.49 | 4865 | 0 |
| 2 | Δ | 400 | 50 | 1340 | 259 | 0.51 | 4360 | 35 |
| 3 | Δ | 400 | 50 | 1330 | 271 | 0.53 | 3705 | 70 |
| 4 | Δ | 400 | 50 | 1315 | 290 | 0.53 | 2955 | 100 |
| 5 | Y | 400 | 50 | 1075 | 170 | 0.28 | 3830 | 0 |
| 6 | Y | 400 | 50 | 1040 | 179 | 0.29 | 3375 | 21 |
| 7 | Y | 400 | 50 | 1020 | 184 | 0.30 | 2820 | 41 |
| 8 | Y | 400 | 50 | 995 | 190 | 0.31 | 2240 | 58 |

Conn. = Connection · U = Supply voltage · f = Frequency · n = Speed · $P_e$ = Power input · I = Current draw · qv = Air flow · $p_{fs}$ = Pressure increase



ebm-papst Mulfingen GmbH & Co. KG · Bachmühle 2 · D-74673 Mulfingen · Phone +49 (0) 7938 81-0 · Fax +49 (0) 7938 81-110 · info1@de.ebmpapst.com · www.ebmpapst.com

# AC axial fan

sickled blades (S series)

## Charts: Air flow 60 Hz

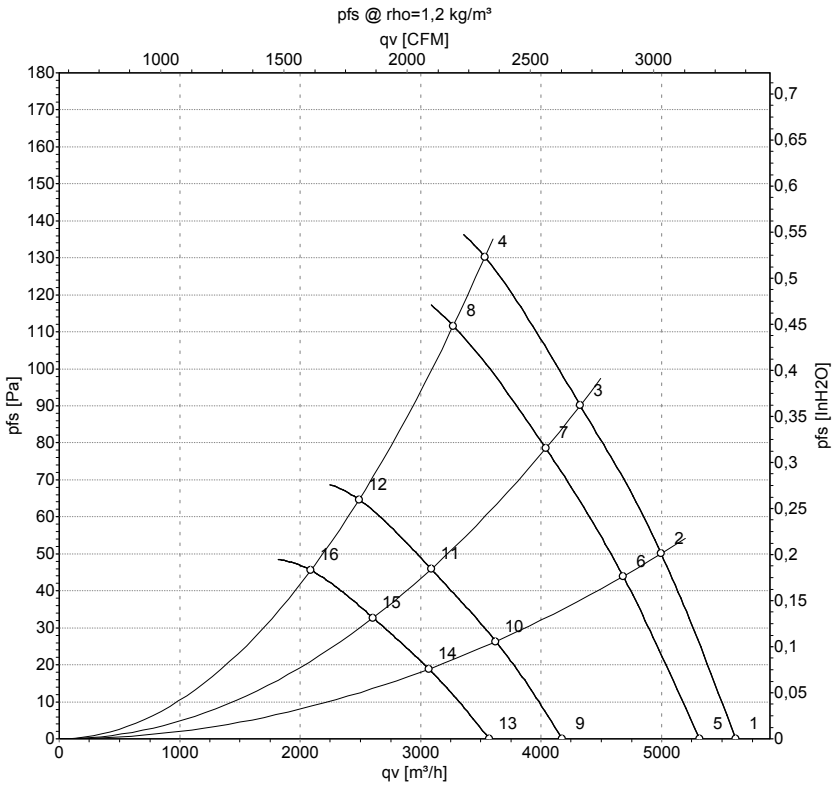


Measurement: LU-108759
Measurement: LU-108752
Measurement: LU-108760
Measurement: LU-108757

Air performance measured as per ISO 5801 Installation category A. For detailed information on the measuring set-up, please contact ebm-papst. Suction-side noise levels: LwA measured as per ISO 13347 / LpA measured with 1m distance to fan axis. The values given are valid under the measuring conditions mentioned above and may vary according to the actual installation situation. With any deviation from the standard set-up, the specific values have to be checked and reviewed with the unit installed.

## Measured values

| | Conn. | U | f | n | $P_e$ | I | qv | $p_{fs}$ |
|---|---|---|---|---|---|---|---|---|
| | | V | Hz | $min^{-1}$ | W | A | $m^3/h$ | Pa |
| 1 | Δ | 480 | 60 | 1575 | 387 | 0.59 | 5615 | 0 |
| 2 | Δ | 480 | 60 | 1555 | 417 | 0.62 | 4995 | 50 |
| 3 | Δ | 480 | 60 | 1540 | 434 | 0.64 | 4325 | 90 |
| 4 | Δ | 480 | 60 | 1525 | 450 | 0.66 | 3535 | 130 |
| 5 | Δ | 400 | 60 | 1485 | 358 | 0.62 | 5315 | 0 |
| 6 | Δ | 400 | 60 | 1455 | 381 | 0.65 | 4680 | 44 |
| 7 | Δ | 400 | 60 | 1435 | 394 | 0.67 | 4040 | 79 |
| 8 | Δ | 400 | 60 | 1415 | 410 | 0.68 | 3270 | 112 |
| 9 | Y | 480 | 60 | 1175 | 261 | 0.36 | 4175 | 0 |
| 10 | Y | 480 | 60 | 1125 | 271 | 0.37 | 3625 | 26 |
| 11 | Y | 480 | 60 | 1100 | 276 | 0.38 | 3085 | 46 |
| 12 | Y | 480 | 60 | 1080 | 280 | 0.39 | 2490 | 65 |
| 13 | Y | 400 | 60 | 1000 | 207 | 0.34 | 3570 | 0 |
| 14 | Y | 400 | 60 | 960 | 212 | 0.35 | 3070 | 19 |
| 15 | Y | 400 | 60 | 930 | 213 | 0.36 | 2605 | 33 |
| 16 | Y | 400 | 60 | 900 | 220 | 0.37 | 2090 | 46 |

Conn. = Connection · U = Supply voltage · f = Frequency · n = Speed · $P_e$ = Power input · I = Current draw · qv = Air flow · $p_{fs}$ = Pressure increase



ebm-papst Mulfingen GmbH & Co. KG · Bachmühle 2 · D-74673 Mulfingen · Phone +49 (0) 7938 81-0 · Fax +49 (0) 7938 81-110 · info1@de.ebmpapst.com · www.ebmpapst.com