A4D400-AP12-02

AC axial fan

sickled blades (S series)



ebm-papst Mulfingen GmbH & Co. KG
Bachmühle 2
D-74673 Mulfingen
Phone: +49(0)7938/81-0
Fax: +49(0)7938/81-110
info1@de.ebmpapst.com
www.ebmpapst.com

Nominal data

Type	**A4D400-AP12-02**
Motor	**M4D074-EI**

Phase		3~	3~	3~	3~
Nominal voltage	[V]	230	230	400	400
Connection		**D**	**D**	Y	Y
Frequency	[Hz]	50	60	50	60
Type of data definition		rfa	rfa	rfa	rfa
Valid for approval / standard		CE	CE	CE	CE
Speed	[min^{-1}]	1450	1690	1450	1690
Power input	[W]	135	185	135	185
Current draw	[A]	0.76	0.68	0.44	0.39
Max. back pressure	[Pa]	150	120	150	120
Max. ambient temperature	[°C]	40	40	40	40

ml = max. load · me = max. efficiency · rfa = running at free air · cs = customer specs · cu = customer unit
Subject to alterations

AC axial fan

sickled blades (S series)

Technical features

Leackage current	< 0.75 mA
Size	400 mm
Operation mode	S1
Direction of rotation	Clockwise, seen on rotor
Mounting position	Shaft horizontal or rotor on bottom; rotor on top on request
Humidity class	F1-2
Direction of air flow	"A"
Insulation class	"B"
Cable exit	Variable
Condensate discharge holes	Rotor-side
Motor bearing	Ball bearing
Mass	4.2 kg
Material of blades	Sheet steel, coated in black
Product conforming to standard	EN 60335-1
Surface of rotor	Coated in black
Number of blades	5
Type of protection	IP 44; Depending on installation and position as per EN 60034-5
Protection class	I
Max. permissible ambient motor temp. (transp./ storage)	+ 80 °C
Min. permissible ambient motor temp. (transp./storage)	- 40 °C
Approval	CCC

ebm-papst Mulfingen GmbH & Co. KG · Bachmühle 2 · D-74673 Mulfingen · Phone: +49(0)7938/81-0 · Fax: +49(0)7938/81-110 · info1@de.ebmpapst.com · www.ebmpapst.com

AC axial fan

sickled blades (S series)

Product drawing

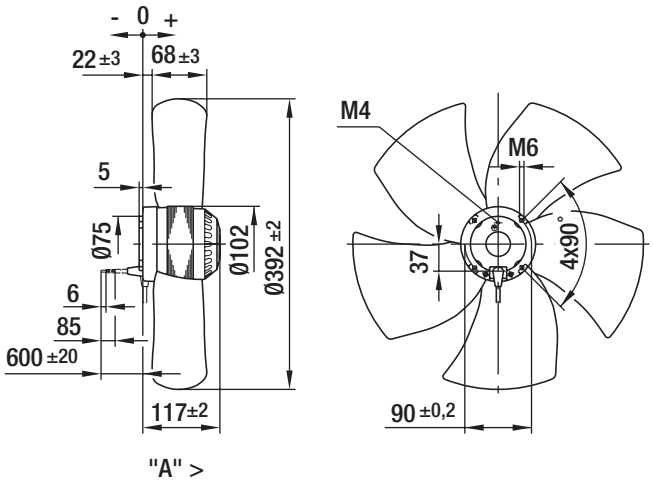

ebm-papst Mulfingen GmbH & Co. KG · Bachmühle 2 · D-74673 Mulfingen · Phone: +49(0)7938/81-0 · Fax: +49(0)7938/81-110 · info1@de.ebmpapst.com · www.ebmpapst.com

AC axial fan

sickled blades (S series)

Connection screen

Delta (3~ 230 VAC)

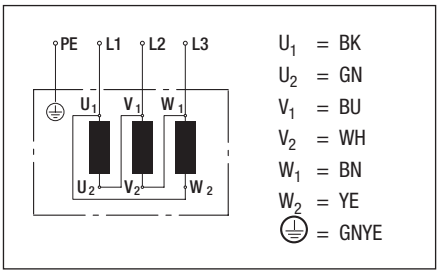

Star (3~ 400 VAC)

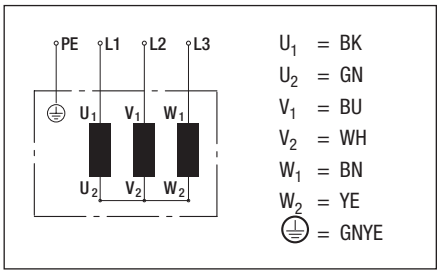

ebm-papst Mulfingen GmbH & Co. KG · Bachmühle 2 · D-74673 Mulfingen · Phone: +49(0)7938/81-0 · Fax: +49(0)7938/81-110 · info1@de.ebmpapst.com · www.ebmpapst.com

AC axial fan

sickled blades (S series)

Charts: Air flow 50 Hz

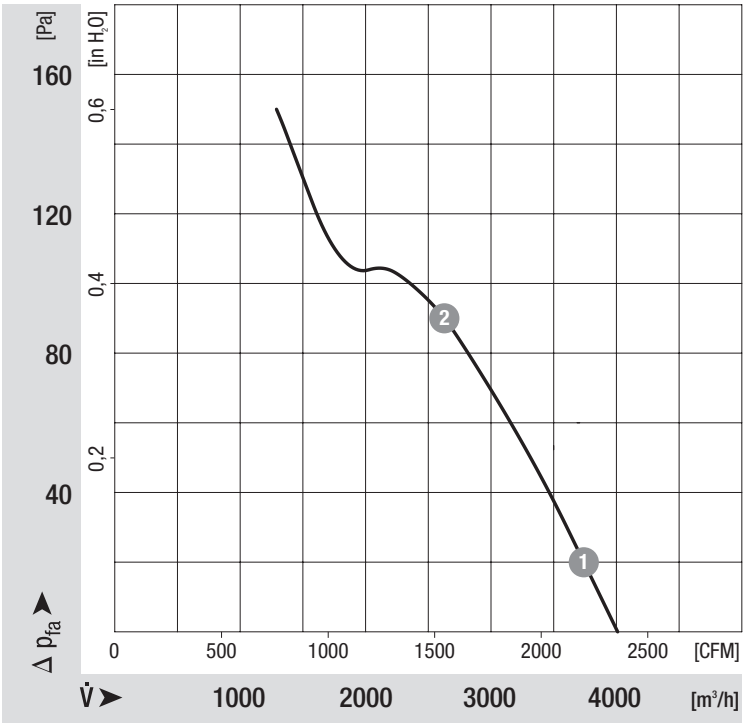

Measured values

	n	P_1	I
	[min⁻¹]	[W]	[A]
1	1440	152	0.47
2	1415	195	0.50

ebm-papst Mulfingen GmbH & Co. KG · Bachmühle 2 · D-74673 Mulfingen · Phone: +49(0)7938/81-0 · Fax: +49(0)7938/81-110 · info1@de.ebmpapst.com · www.ebmpapst.com

AC axial fan

sickled blades (S series)

Charts: Air flow 60 Hz

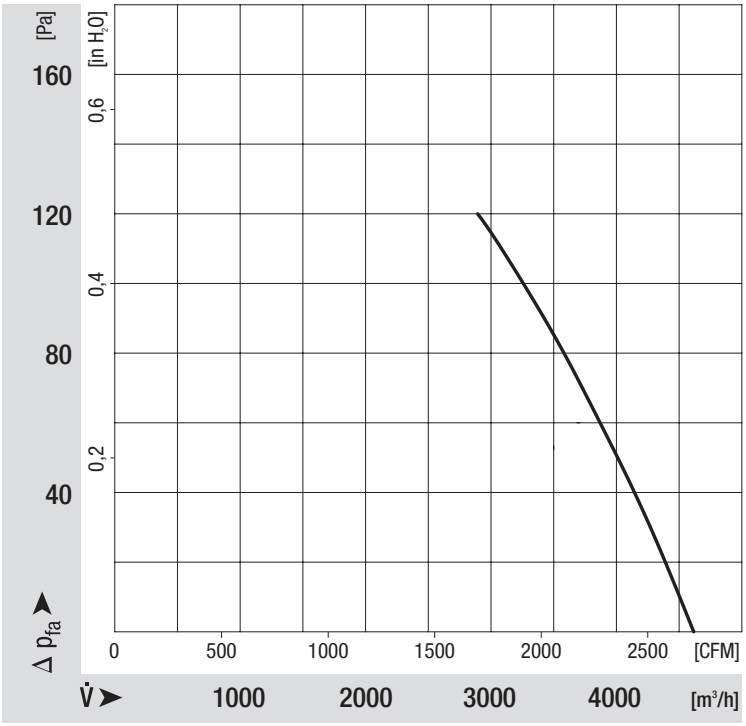

ebm-papst Mulfingen GmbH & Co. KG · Bachmühle 2 · D-74673 Mulfingen · Phone: +49(0)7938/81-0 · Fax: +49(0)7938/81-110 · info1@de.ebmpapst.com · www.ebmpapst.com