A4D500-AE01-05

AC axial fan

sickled blades (S series)

ebm-papst Mulfingen GmbH & Co. KG
Bachmühle 2 · D-74673 Mulfingen
Phone +49 7938 81-0
Fax +49 7938 81-110
info1@de.ebmpapst.com
www.ebmpapst.com

Limited partnership · Headquarters Mulfingen
County court Stuttgart · HRA 590344

General partner: Elektrobau Mulfingen GmbH · Headquarters Mulfingen
County court Stuttgart · HRB 590142

ErP2015 EXCEEDS THE NORM

Nominal data

Type	**A4D500-AE01-05**
Motor	**M4D110-GF**

Phase		3~	3~	3~	3~	3~	3~
Nominal voltage	VAC	230	230	277	400	400	480
Connection		**Δ**	**Δ**	**Δ**	Y	Y	Y
Frequency	Hz	50	60	60	50	60	60
Type of data definition		ml	ml	ml	ml	ml	ml
Valid for approval / standard		CE	CE	CE	CE	CE	CE
Speed	min^{-1}	1370	1520	1600	1370	1520	1600
Power input	W	680	1010	1110	680	1010	1110
Current draw	A	2.56	3.11	3.11	1.48	1.8	1.8
Max. back pressure	Pa	160	195	215	160	195	215
Max. ambient temperature	°C	90	60	60	90	60	60

ml = max. load · me = max. efficiency · fa = running at free air · cs = customer specs · cu = customer unit
Subject to alterations

Data according to ErP directive

Installation category	A
Efficiency category	Static
Closed-loop speed control	No
Specific ratio*	1,00

* Specific ratio = 1 + p_{sf} / 100 000

		Actual	Request 2013	Request 2015
Overall efficiency η_e		34,8	28,5	32,5
Efficiency grade N		42,3	36	40
Power input P_e	kW	0,65		
Air flow q_v	m^3/h	5605		
Pressure increase Total p_{sf}	Pa	146		
Speed n	min^{-1}	1375		

Data established at point of optimum efficiency

AC axial fan

sickled blades (S series)

Technical features

Mass	9.9 kg
Size	500 mm
Surface of rotor	Cast in aluminium
Material of terminal box	PP plastic, black
Material of blades	Aluminium sheet
Number of blades	5
Blade angle	-5°
Direction of air flow	"V"
Direction of rotation	Counter-clockwise, seen on rotor
Type of protection	IP 54
Insulation class	"F"
Humidity class	F3-1
Max. permissible ambient motor temp. (transp./ storage)	+ 80 °C
Min. permissible ambient motor temp. (transp./storage)	- 40 °C
Mounting position	Shaft horizontal or rotor on bottom; rotor on top on request
Condensate discharge holes	Rotor-side
Operation mode	S1
Motor bearing	Ball bearing
Leakage current	<= 3.5 mA
Electrical leads	Via terminal box
Motor protection	Thermal overload protector (TOP) brought out
Cable exit	Axial
Protection class	I (if protective earth is connected by customer)
Product conforming to standard	EN 61800-5-1; CE
Approval	VDE

ebm-papst Mulfingen GmbH & Co. KG · Bachmühle 2 · D-74673 Mulfingen · Phone +49 7938 81-0 · Fax +49 7938 81-110 · info1@de.ebmpapst.com · www.ebmpapst.com

AC axial fan

sickled blades (S series)

Product drawing

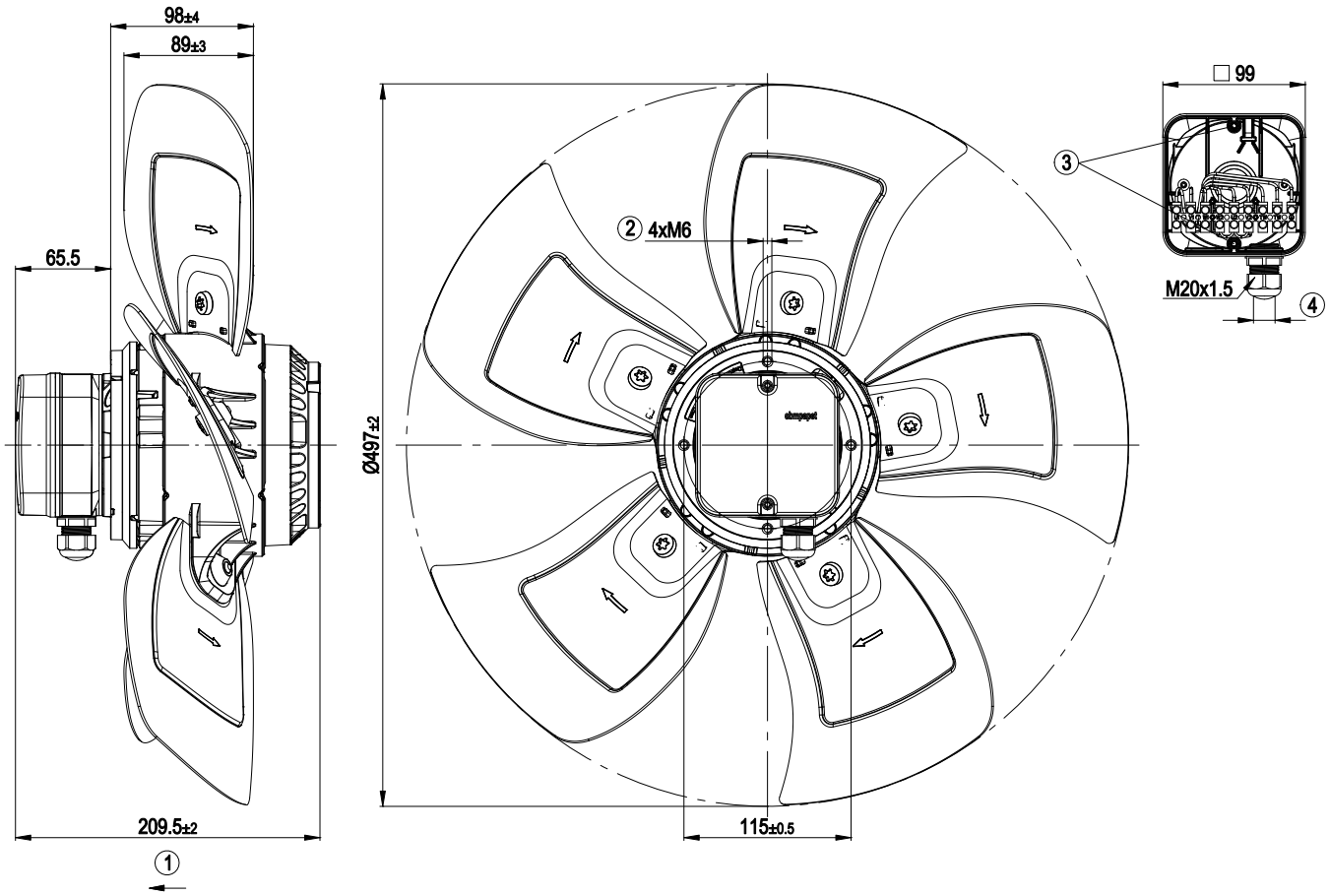

1	Direction of air flow "V"
2	Screw depth max. 12 mm
3	Tightening torque 1.5 ± 0.2 Nm
4	Cable diameter: min. 6 mm, max. 12 mm; tightening torque: 2 ± 0.3 Nm

ebm-papst Mulfingen GmbH & Co. KG · Bachmühle 2 · D-74673 Mulfingen · Phone +49 7938 81-0 · Fax +49 7938 81-110 · info1@de.ebmpapst.com · www.ebmpapst.com

AC axial fan

sickled blades (S series)

Connection screen

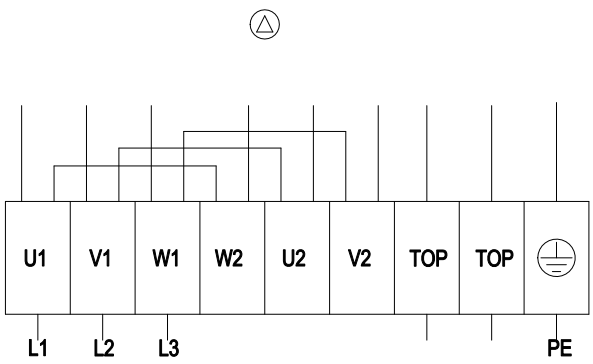

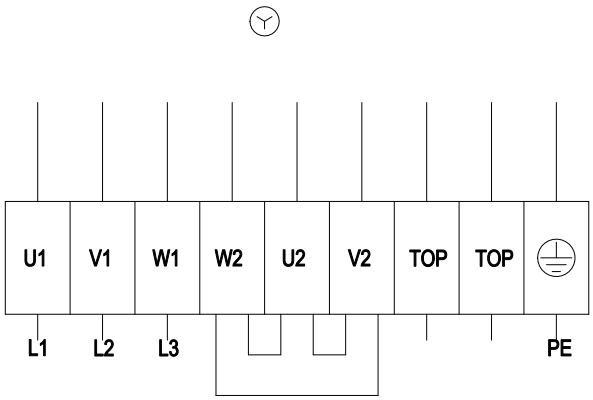

Note: Direction of rotation changes when two phases are reversed

Δ	Delta-connection	Y	Star connection	L1	= U1 = black
L2	= V1 = blue	L3	= W1 = brown	W2	yellow
U2	green	V2	white	TOP	2 x grey
PE	green / yellow				

ebm-papst Mulfingen GmbH & Co. KG · Bachmühle 2 · D-74673 Mulfingen · Phone +49 7938 81-0 · Fax +49 7938 81-110 · info1@de.ebmpapst.com · www.ebmpapst.com

AC axial fan

sickled blades (S series)

Charts: Air flow 50 Hz Y

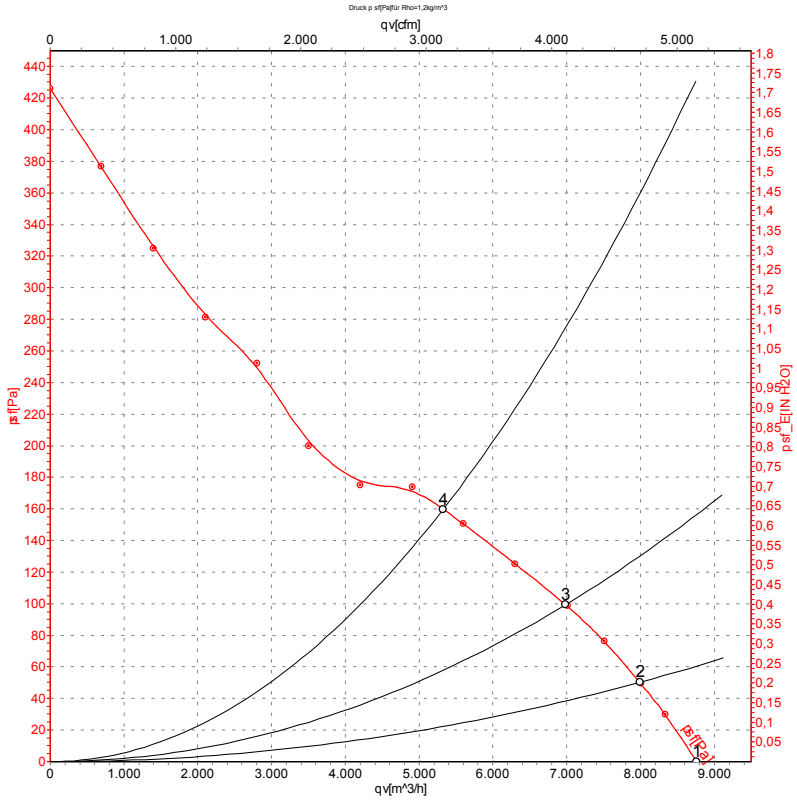

Measurement: LU-73054

Air performance measured as per ISO 5801 Installation category A. For detailed information on the measuring set-up, please contact ebm-papst. Suction-side noise levels: LwA measured as per ISO 13347 / LpA measured with 1m distance to fan axis. The values given are valid under the measuring conditions mentioned above and may vary according to the actual installation situation. With any deviation from the standard set-up, the specific values have to be checked and reviewed with the unit installed.

Measured values

	Conn.	U	f	n	P_e	I	LwA_{in}	qv	p_{sf}
		V	Hz	min^{-1}	W	A	dB(A)	m^3/h	Pa
1	Y	400	50	1410	496	1.25	80	8760	0
2	Y	400	50	1400	554	1.31	78	7990	50
3	Y	400	50	1385	610	1.37	79	6985	100
4	Y	400	50	1370	680	1.48	79	5325	160

ebm-papst Mulfingen GmbH & Co. KG · Bachmühle 2 · D-74673 Mulfingen · Phone +49 7938 81-0 · Fax +49 7938 81-110 · info1@de.ebmpapst.com · www.ebmpapst.com

AC axial fan

sickled blades (S series)

Charts: Air flow 60 Hz Y

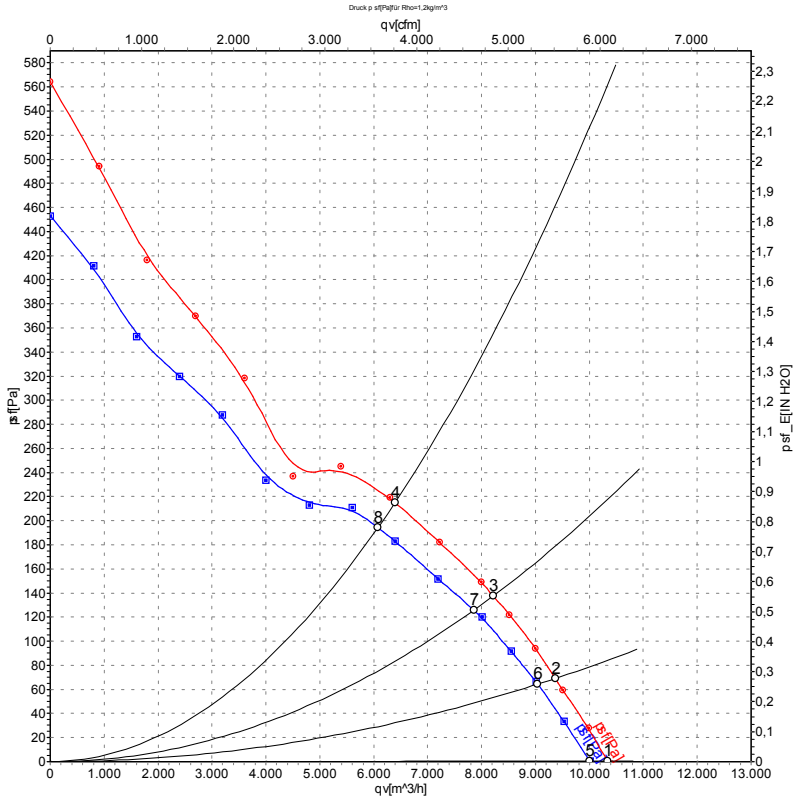

Measurement: LU-73055
Measurement: LU-73057

Air performance measured as per ISO 5801 Installation category A. For detailed information on the measuring set-up, please contact ebm-papst. Suction-side noise levels: LwA measured as per ISO 13347 / LpA measured with 1m distance to fan axis. The values given are valid under the measuring conditions mentioned above and may vary according to the actual installation situation. With any deviation from the standard set-up, the specific values have to be checked and reviewed with the unit installed.

Measured values

	Conn.	U	f	n	P_e	I	qv	p_{sf}
		V	Hz	min^{-1}	W	A	m^3/h	Pa
1	Y	480	60	1670	805	1.40	10340	0
2	Y	480	60	1650	899	1.50	9365	70
3	Y	480	60	1630	984	1.59	8220	138
4	Y	480	60	1600	1110	1.80	6390	215
5	Y	400	60	1615	740	1.35	10000	0
6	Y	400	60	1585	834	1.49	9040	65
7	Y	400	60	1560	907	1.58	7855	125
8	Y	400	60	1520	1010	1.80	6080	195

ebm-papst Mulfingen GmbH & Co. KG · Bachmühle 2 · D-74673 Mulfingen · Phone +49 7938 81-0 · Fax +49 7938 81-110 · info1@de.ebmpapst.com · www.ebmpapst.com