A4E300-AP26-01

AC axial fan

sickled blades (S series)

ebm-papst Mulfingen GmbH & Co. KG
Bachmühle 2
74673 Mulfingen
Phone: +49 7938 81-0
Fax: +49 7938 81-110
www.ebmpapst.com
info1@de.ebmpapst.com

Nominal data

Type	**A4E300-AP26-01**		
Motor	**M4E068-CF**		
Phase		1~	1~
Nominal voltage	[V]	230	230
Frequency	[Hz]	50	60
Type of data definition		rfa	rfa
Valid for approval / standard		CE	CE
Speed	[min^{-1}]	1400	1630
Power input	[W]	68	92
Current draw	[A]	0.3	0.41
Motor capacitor	[µF]	2	2
Capacitor voltage	[VDB]	400	400
Max. back pressure	[Pa]	80	70
Max. ambient temperature	[°C]	60	45

ml = max. load · me = max. efficiency · rfa = running at free air · cs = customer specs · cu = customer unit
Subject to alterations

AC axial fan

sickled blades (S series)

Technical features

Leackage current	< 0.75 mA
Size	300 mm
Operation mode	S1
Direction of rotation	Counter-clockwise, seen on rotor
Mounting position	Shaft horizontal or rotor on bottom; rotor on top on request
Humidity class	F1-2
Direction of air flow	"V"
Insulation class	"B"
Cable exit	Variable
Condensate discharge holes	Rotor-side
Bearing motor	Ball bearing
Mass	2.1 kg
Material of blades	Sheet steel, coated in black
Motor protection	Thermal overload protector (TOP) wired internally
Product conforming to standard	CE; EN 60335-1
Surface of rotor	Coated in black
Number of blades	5
Type of protection	IP 44; Depending on installation and position as per EN 60034-5
Protection class	I
Max. permissible ambient motor temp. (transp./ storage)	+ 80 °C
Min. permissible ambient motor temp. (transp./storage)	- 40 °C
Approval	CCC; GOST

ebm-papst Mulfingen GmbH & Co. KG · Bachmühle 2 · 74673 Mulfingen · Phone: +49 7938 81-0 · Fax: +49 7938 81-110 · www.ebmpapst.com · info1@de.ebmpapst.com

AC axial fan

sickled blades (S series)

Product drawing

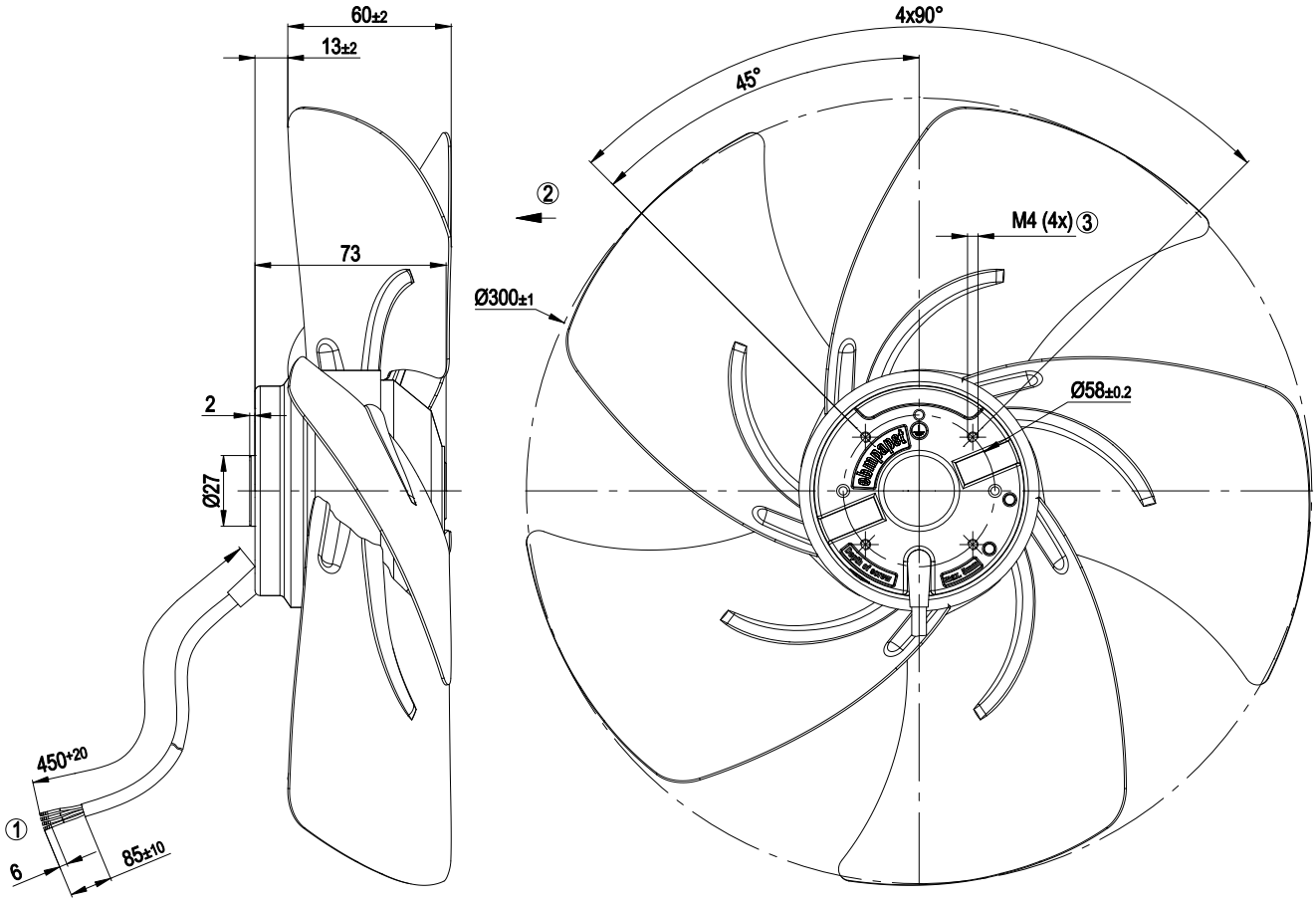

1	Connection line PVC, 4x brass lead tips crimped
2	Direction of air flow "V"
3	Depth of screw max. 5 mm

Connection screen

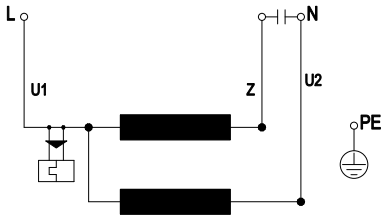

U1	blue	Z	brown	U2	black
PE	green/yellow				

ebm-papst Mulfingen GmbH & Co. KG · Bachmühle 2 · 74673 Mulfingen · Phone: +49 7938 81-0 · Fax: +49 7938 81-110 · www.ebmpapst.com · info1@de.ebmpapst.com

AC axial fan

sickled blades (S series)

Charts: Air flow 50 Hz

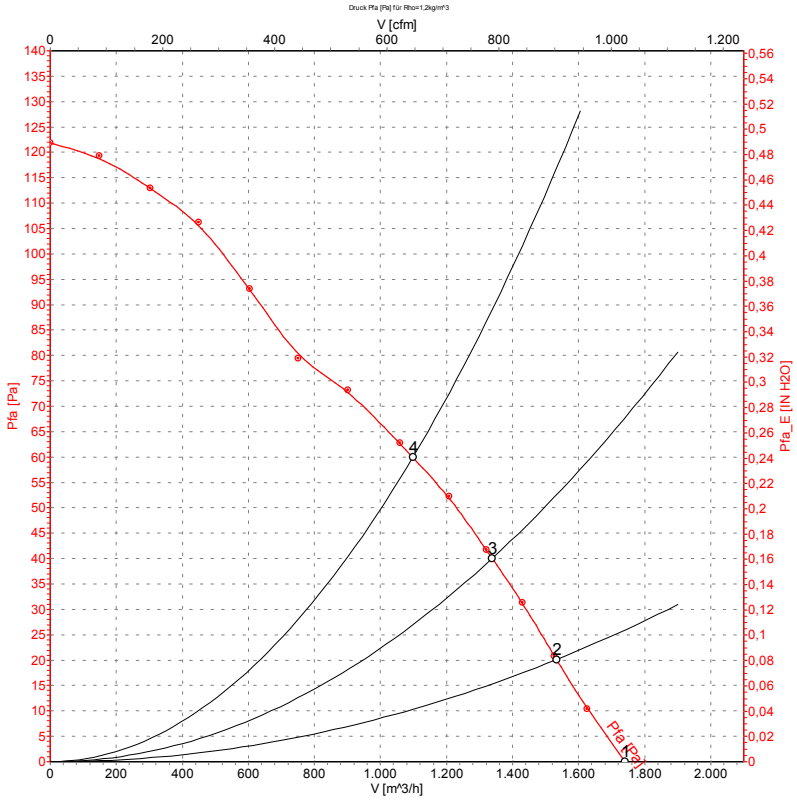

Measurement: LU-60321

Measured values

	U	f	n	P_1	I	$\dot{V}$	p_{fa}
	[V]	[Hz]	[min^{-1}]	[W]	[A]	[m^3/h]	[Pa]
1	230	50	1400	68	0.30	1740	0
2	230	50	1395	70	0.32	1535	20
3	230	50	1380	74	0.33	1340	40
4	230	50	1355	79	0.35	1100	60

ebm-papst Mulfingen GmbH & Co. KG · Bachmühle 2 · 74673 Mulfingen · Phone: +49 7938 81-0 · Fax: +49 7938 81-110 · www.ebmpapst.com · info1@de.ebmpapst.com

AC axial fan

sickled blades (S series)

Charts: Air flow 60 Hz

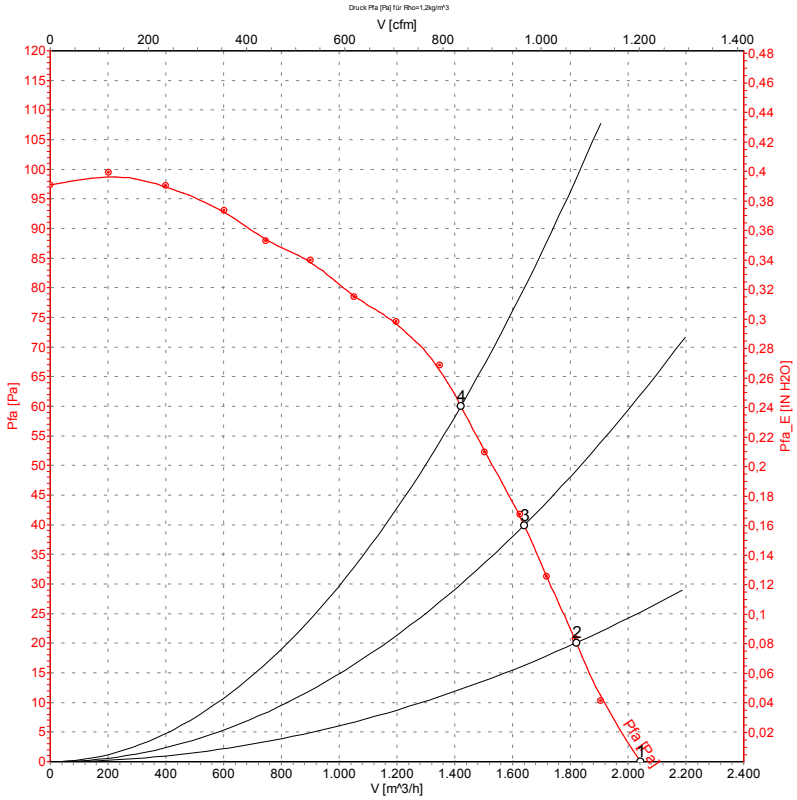

Measurement: LU-60322

Measured values

	U	f	n	P_1	I	$\dot{V}$	p_{fa}
	[V]	[Hz]	[min^{-1}]	[W]	[A]	[m^3/h]	[Pa]
1	230	60	1630	92	0.41	2045	0
2	230	60	1610	96	0.42	1820	20
3	230	60	1585	99	0.43	1640	40
4	230	60	1555	103	0.45	1420	60

ebm-papst Mulfingen GmbH & Co. KG · Bachmühle 2 · 74673 Mulfingen · Phone: +49 7938 81-0 · Fax: +49 7938 81-110 · www.ebmpapst.com · info1@de.ebmpapst.com