**A4E300-AS72-01**

# AC axial fan - HyBlade®

sickled blades (S series)

**ebm-papst Mulfingen GmbH & Co. KG**
Bachmühle 2 · D-74673 Mulfingen
Phone +49 7938 81-0
Fax +49 7938 81-110
info1@de.ebmpapst.com
www.ebmpapst.com

## Nominal data

| | | | |
|---|---|---|---|
| **Type** | **A4E300-AS72-01** | | |
| **Motor** | **M4E068-CF** | | |
| Phase | | 1~ | 1~ |
| Nominal voltage | VAC | 230 | 230 |
| Frequency | Hz | 50 | 60 |
| Type of data definition | | rfa | rfa |
| Valid for approval / standard | | CE | CE |
| Speed | $min^{-1}$ | 1380 | 1590 |
| Power input | W | 62 | 80 |
| Current draw | A | 0.28 | 0.36 |
| Motor capacitor | µF | 2 | 2 |
| Capacitor voltage | VDB | 400 | 400 |
| Capacitor standard | | P0 (CE) | P0 (CE) |
| Max. back pressure | Pa | 80 | 60 |
| Max. ambient temperature | °C | 50 | 50 |

ml = max. load · me = max. efficiency · rfa = running at free air · cs = customer specs · cu = customer unit
Subject to alterations

# AC axial fan - HyBlade®

sickled blades (S series)

## Technical features

| | |
|---|---|
| **Mass** | 2.7 kg |
| **Size** | 300 mm |
| **Surface of rotor** | Coated in black |
| **Material of blades** | Press-fitted sheet steel blank, sprayed with PP plastic |
| **Number of blades** | 5 |
| **Direction of air flow** | "V" |
| **Direction of rotation** | Counter-clockwise, seen on rotor |
| **Type of protection** | IP 44; Depending on installation and position |
| **Insulation class** | "B" |
| **Humidity class** | F1-2 |
| **Max. permissible ambient motor temp. (transp./ storage)** | + 80 °C |
| **Min. permissible ambient motor temp. (transp./storage)** | - 40 °C |
| **Mounting position** | Any |
| **Condensate discharge holes** | None |
| **Operation mode** | S1 |
| **Motor bearing** | Ball bearing |
| **Leakage current** | < 0.75 mA |
| **Motor protection** | Thermal overload protector (TOP) wired internally |
| **Cable exit** | Variable |
| **Protection class** | I |
| **Product conforming to standard** | EN 60335-1; CE |



ebm-papst Mulfingen GmbH & Co. KG · Bachmühle 2 · D-74673 Mulfingen · Phone +49 7938 81-0 · Fax +49 7938 81-110 · info1@de.ebmpapst.com · www.ebmpapst.com

# AC axial fan - HyBlade®

sickled blades (S series)

## Product drawing

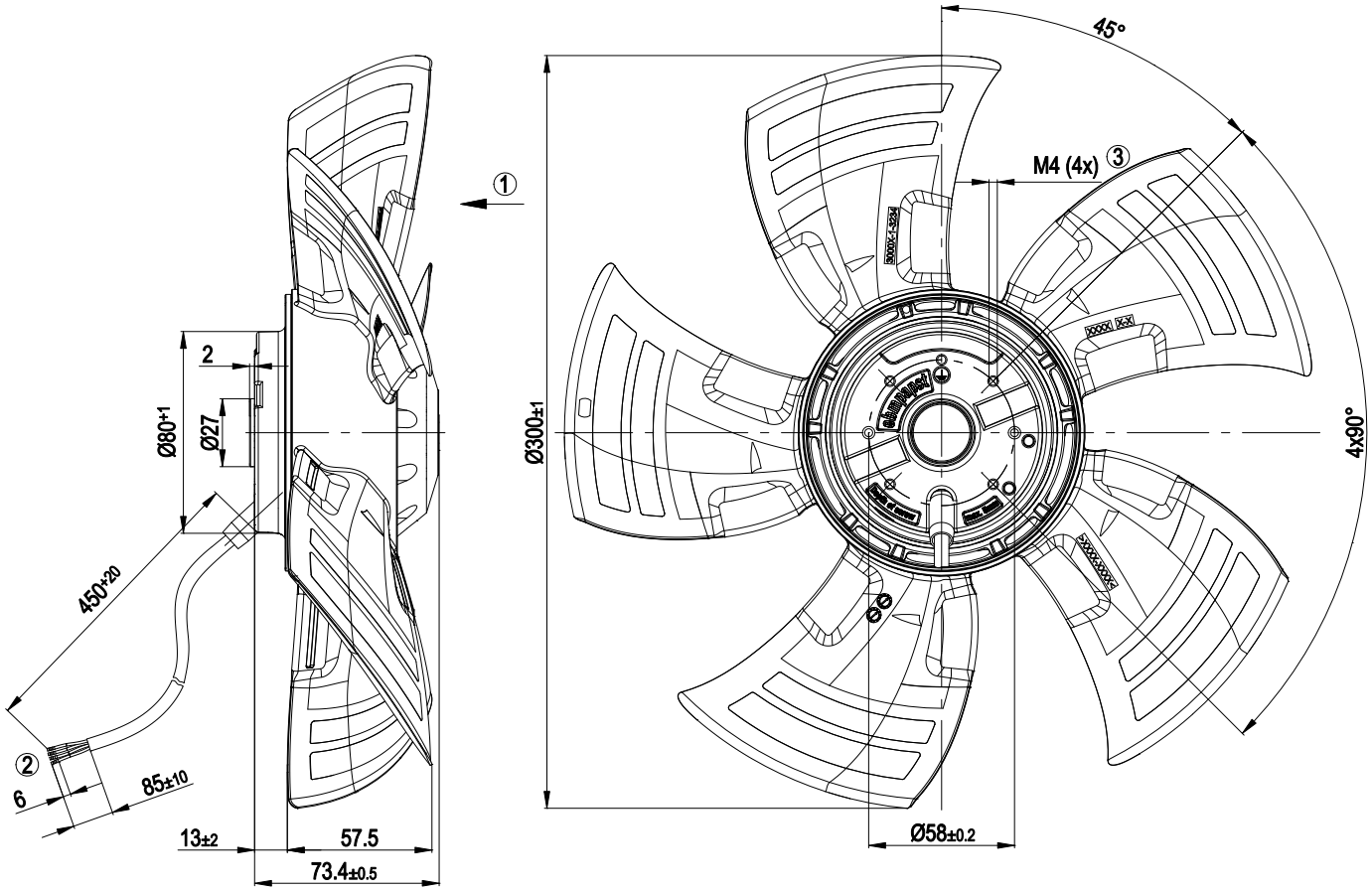


| | |
|---|---|
| 1 | Direction of air flow "V" |
| 2 | Connection line H03VV-F4G0.5, 4x brass lead tips crimped |
| 3 | Depth of screw max. 5 mm |

## Connection screen

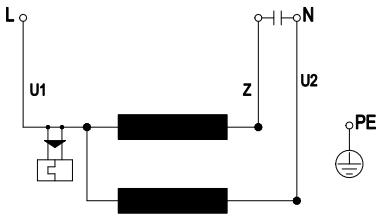


| | | | | | |
|---|---|---|---|---|---|
| U1 | blue | Z | brown | U2 | black |
| PE | green/yellow | | | | |



ebm-papst Mulfingen GmbH & Co. KG · Bachmühle 2 · D-74673 Mulfingen · Phone +49 7938 81-0 · Fax +49 7938 81-110 · info1@de.ebmpapst.com · www.ebmpapst.com

# AC axial fan - HyBlade®

sickled blades (S series)

## Charts: Air flow 50 Hz

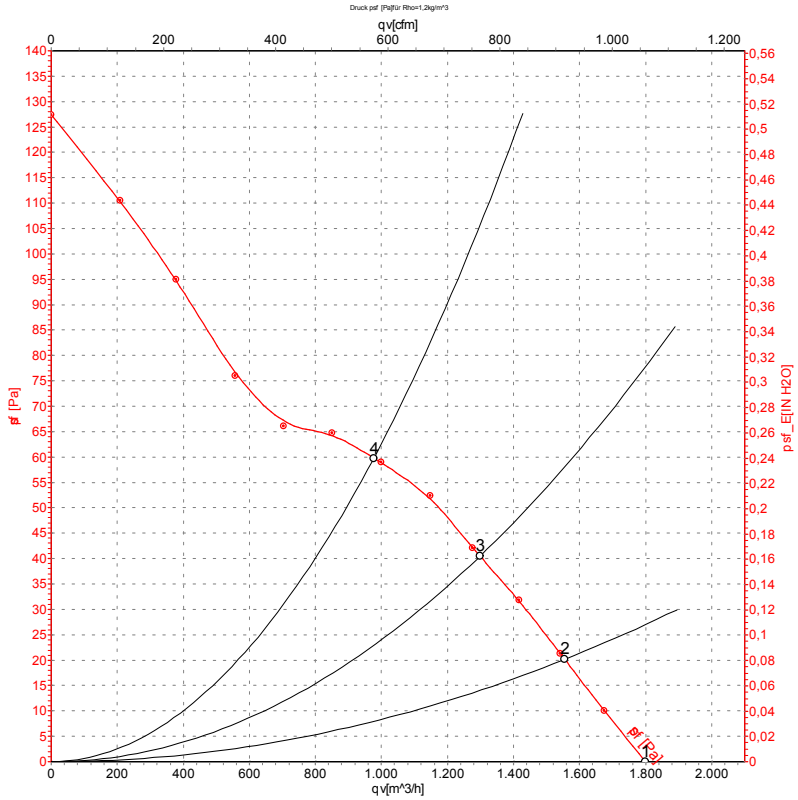


Measurement: LU-112383

Air performance measured as per ISO 5801 Installation category A. For detailed information on the measuring set-up, please contact ebm-papst. Suction-side noise levels: LwA measured as per ISO 13347 / LpA measured with 1m distance to fan axis. The values given are valid under the measuring conditions mentioned above and may vary according to the actual installation situation. With any deviation from the standard set-up, the specific values have to be checked and reviewed with the unit installed.

## Measured values

| | U | f | n | $P_e$ | I | $LpA_{in}$ | $LwA_{in}$ | qv | $p_{sf}$ |
|---|---|---|---|---|---|---|---|---|---|
| | V | Hz | $min^{-1}$ | W | A | dB(A) | dB(A) | $m^3/h$ | Pa |
| 1 | 230 | 50 | 1380 | 62 | 0.28 | 53 | 60 | 1800 | 0 |
| 2 | 230 | 50 | 1370 | 63 | 0.28 | 52 | 59 | 1555 | 20 |
| 3 | 230 | 50 | 1355 | 66 | 0.29 | 51 | 58 | 1300 | 40 |
| 4 | 230 | 50 | 1330 | 70 | 0.31 | 53 | 61 | 975 | 60 |



ebm-papst Mulfingen GmbH & Co. KG · Bachmühle 2 · D-74673 Mulfingen · Phone +49 7938 81-0 · Fax +49 7938 81-110 · info1@de.ebmpapst.com · www.ebmpapst.com

# AC axial fan - HyBlade®

sickled blades (S series)

## Charts: Air flow 60 Hz

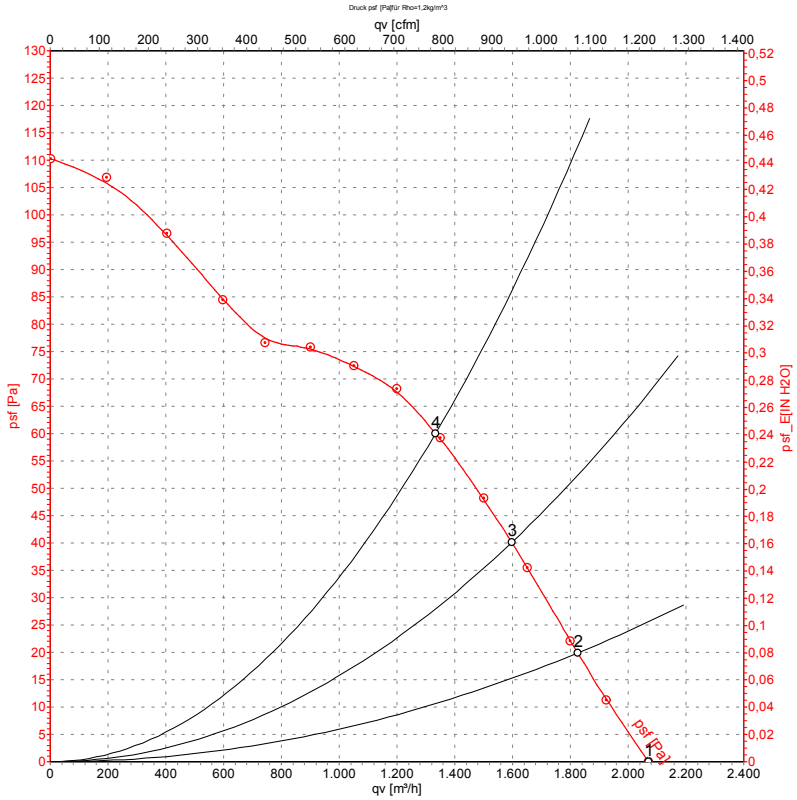


Measurement: LU-112387

Air performance measured as per ISO 5801 Installation category A. For detailed information on the measuring set-up, please contact ebm-papst. Suction-side noise levels: LwA measured as per ISO 13347 / LpA measured with 1m distance to fan axis. The values given are valid under the measuring conditions mentioned above and may vary according to the actual installation situation. With any deviation from the standard set-up, the specific values have to be checked and reviewed with the unit installed.

## Measured values

| | U | f | n | $P_e$ | I | $LpA_{in}$ | $LwA_{in}$ | qv | $p_{sf}$ |
|---|---|---|---|---|---|---|---|---|---|
| | V | Hz | $min^{-1}$ | W | A | dB(A) | dB(A) | $m^3/h$ | Pa |
| 1 | 230 | 60 | 1590 | 80 | 0.36 | 56 | 63 | 2070 | 0 |
| 2 | 230 | 60 | 1560 | 83 | 0.36 | 55 | 62 | 1825 | 20 |
| 3 | 230 | 60 | 1535 | 86 | 0.37 | 55 | 62 | 1595 | 40 |
| 4 | 230 | 60 | 1510 | 88 | 0.38 | 55 | 62 | 1335 | 60 |



ebm-papst Mulfingen GmbH & Co. KG · Bachmühle 2 · D-74673 Mulfingen · Phone +49 7938 81-0 · Fax +49 7938 81-110 · info1@de.ebmpapst.com · www.ebmpapst.com