A4E315-AS20-01

AC axial fan

sickled blades (S series), single inlet

ebm-papst Mulfingen GmbH & Co. KG
Bachmühle 2 · D-74673 Mulfingen
Phone +49 7938 81-0
Fax +49 7938 81-110
info1@de.ebmpapst.com
www.ebmpapst.com

Limited partnership · Headquarters Mulfingen
County court Stuttgart · HRA 590344

General partner Elektrobau Mulfingen GmbH · Headquarters Mulfingen
County court Stuttgart · HRB 590142

Nominal data

Type	**A4E315-AS20-01**
Motor	**M4E068-DF**

Phase		1~	1~
Nominal voltage	VAC	230	230
Frequency	Hz	50	60
Type of data definition		ml	ml
Valid for approval / standard		CE	CE
Speed	min^{-1}	1350	1490
Power input	W	110	148
Current draw	A	0.52	0.66
Motor capacitor	µF	3	3
Capacitor voltage	VDB	400	400
Capacitor standard		P0 (CE)	P0 (CE)
Max. back pressure	Pa	70	85
Min. ambient temperature	°C	-25	-25
Max. ambient temperature	°C	65	70
Starting current	A	1.2	1.18

ml = Max. load · me = Max. efficiency · fa = Running at free air · cs = Customer specs · cu = Customer unit
Subject to alterations

AC axial fan

sickled blades (S series), single inlet

Technical features

Mass	2.0 kg
Size	315 mm
Surface of rotor	Coated in black
Material of blades	Press-fitted sheet steel blank, sprayed with PP plastic
Number of blades	5
Direction of air flow	"V"
Direction of rotation	Counter-clockwise, seen on rotor
Type of protection	IP 44; Depending on installation and position as per EN 60034-5
Insulation class	"F"
Humidity class	F1-2
Max. permissible ambient motor temp. (transp./ storage)	+ 80 °C
Min. permissible ambient motor temp. (transp./storage)	- 40 °C
Mounting position	Shaft horizontal or rotor on bottom; rotor on top on request
Condensate discharge holes	Rotor-side
Operation mode	S1
Motor bearing	Ball bearing
Touch current acc. IEC 60990 (measuring network Fig. 4, TN system)	< 0.75 mA
Motor protection	Thermal overload protector (TOP) wired internally
Cable exit	Axial
Protection class	I (if protective earth is connected by customer)
Product conforming to standard	EN 60335-1; CE

ebm-papst Mulfingen GmbH & Co. KG · Bachmühle 2 · D-74673 Mulfingen · Phone +49 (0) 7938 81-0 · Fax +49 (0) 7938 81-110 · info1@de.ebmpapst.com · www.ebmpapst.com

AC axial fan

sickled blades (S series), single inlet

Product drawing

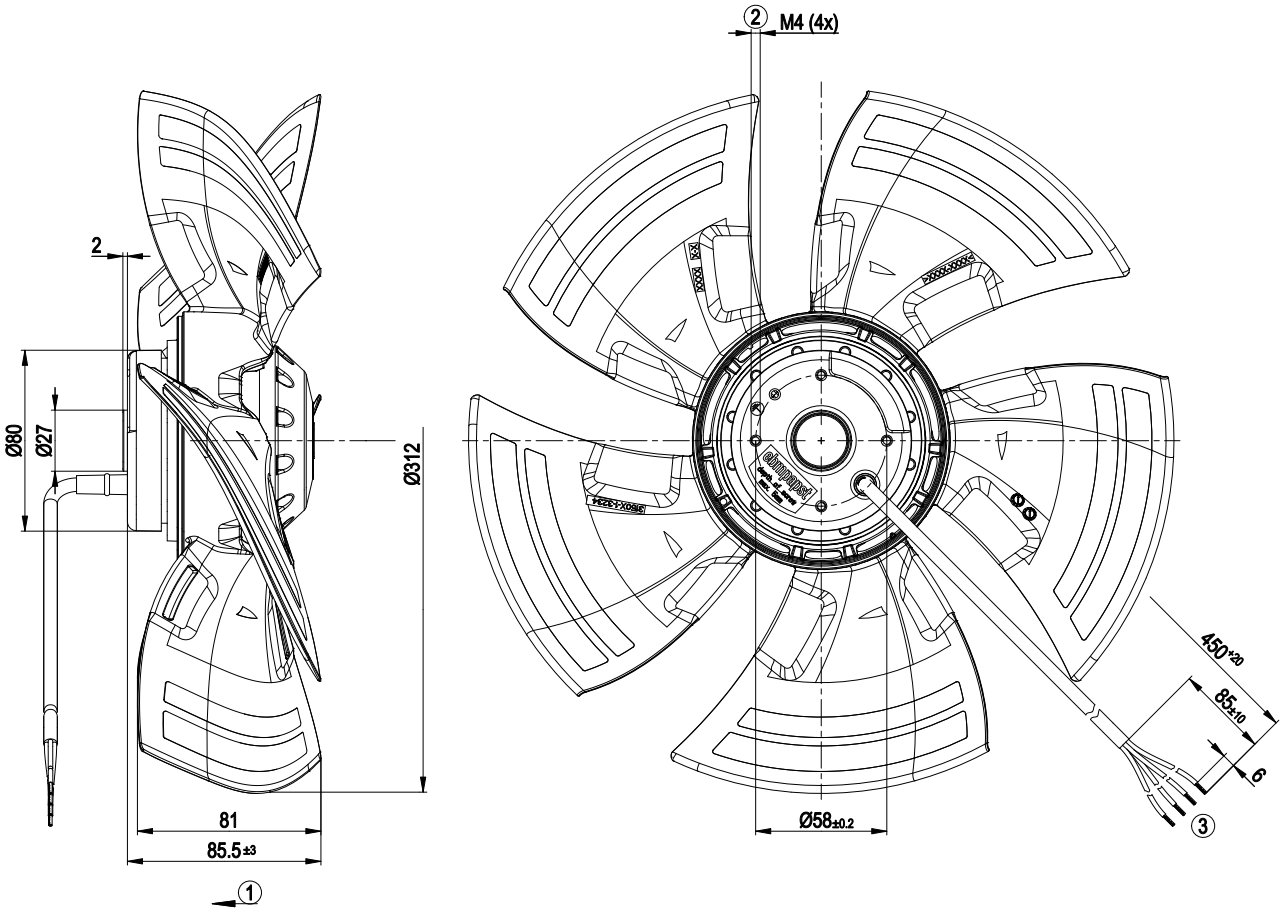

1	Direction of air flow "V"
2	Thread reach max. 5 mm
3	Connection line silicone 4G 0.5 mm², 4x lead tips crimped

Connection screen

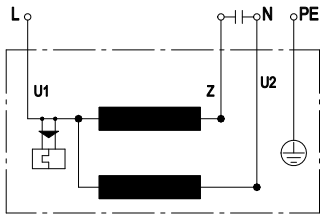

U1	blue	Z	brown	U2	black
PE	green/yellow				

ebm-papst Mulfingen GmbH & Co. KG · Bachmühle 2 · D-74673 Mulfingen · Phone +49 (0) 7938 81-0 · Fax +49 (0) 7938 81-110 · info1@de.ebmpapst.com · www.ebmpapst.com

AC axial fan

sickled blades (S series), single inlet

Charts: Air flow 50 Hz

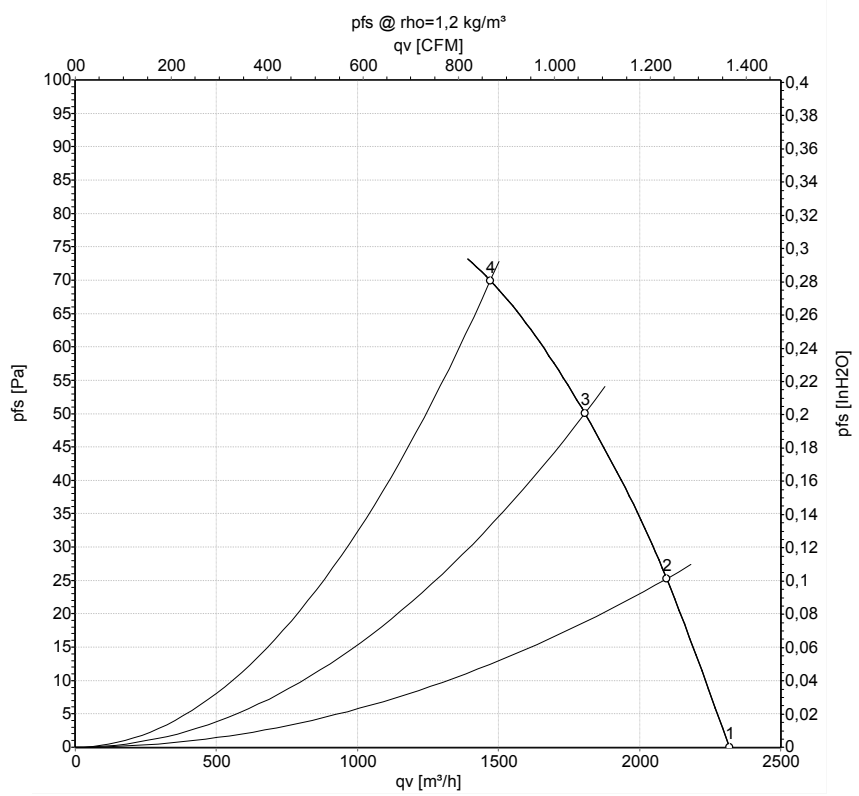

Measurement: LU-159582

Air performance measured as per ISO 5801 Installation category A. For detailed information on the measuring set-up, please contact ebm-papst. Suction-side noise levels: LwA measured as per ISO 13347 / LpA measured with 1m distance to fan axis. The values given are valid under the measuring conditions mentioned above and may vary according to the actual installation situation. With any deviation from the standard set-up, the specific values have to be checked and reviewed with the unit installed.

Measured values

	U	f	n	P_e	I	LpA_{in}	LwA_{in}	qv	p_{fs}
	V	Hz	min^{-1}	W	A	dB(A)	dB(A)	m^3/h	Pa
1	230	50	1390	96	0.48	58	64	2320	0
2	230	50	1380	100	0.49	55	61	2095	25
3	230	50	1365	105	0.51	52	59	1805	50
4	230	50	1350	110	0.52	51	59	1470	70

U = Supply voltage · f = Frequency · n = Speed · P_e = Power input · I = Current draw · LpA_{in} = Sound pressure level inlet side · LwA_{in} = Sound power level inlet side · qv = Air flow
p_{fs} = Pressure increase

ebm-papst Mulfingen GmbH & Co. KG · Bachmühle 2 · D-74673 Mulfingen · Phone +49 (0) 7938 81-0 · Fax +49 (0) 7938 81-110 · info1@de.ebmpapst.com · www.ebmpapst.com

AC axial fan

sickled blades (S series), single inlet

Charts: Air flow 60 Hz

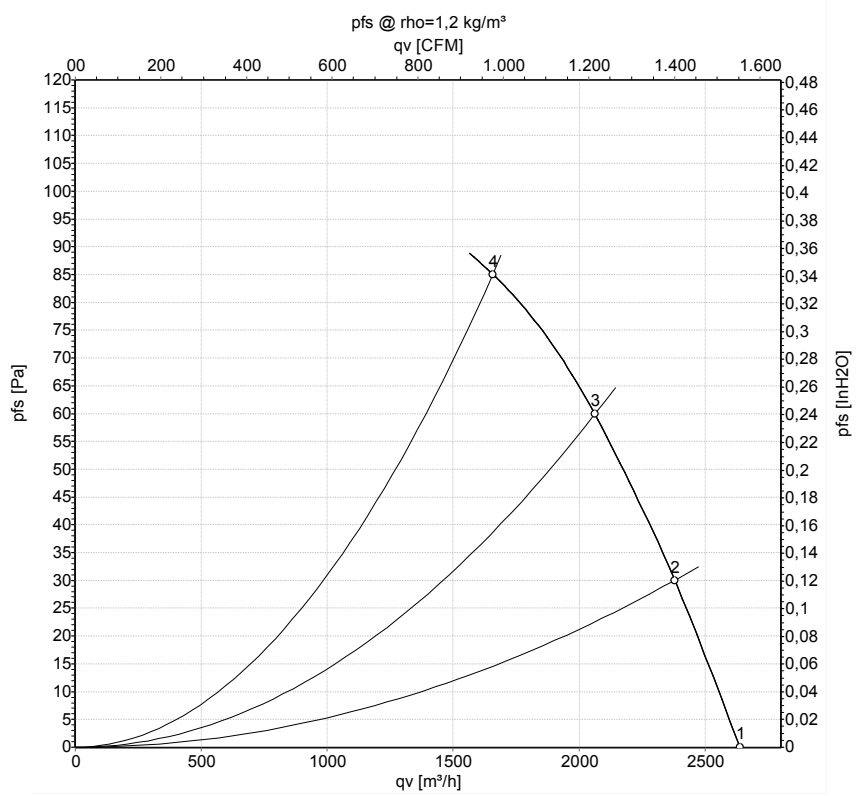

Measurement: LU-159796

Air performance measured as per ISO 5801 Installation category A. For detailed information on the measuring set-up, please contact ebm-papst. Suction-side noise levels: LwA measured as per ISO 13347 / LpA measured with 1m distance to fan axis. The values given are valid under the measuring conditions mentioned above and may vary according to the actual installation situation. With any deviation from the standard set-up, the specific values have to be checked and reviewed with the unit installed.

Measured values

	U	f	n	P_e	I	qv	p_{fs}
	V	Hz	min^{-1}	W	A	m^3/h	Pa
1	230	60	1590	121	0.53	2640	0
2	230	60	1565	130	0.56	2380	30
3	230	60	1535	136	0.59	2065	60
4	230	60	1490	148	0.66	1660	85

U = Supply voltage · f = Frequency · n = Speed · P_e = Power input · I = Current draw · qv = Air flow · p_{fs} = Pressure increase

ebm-papst Mulfingen GmbH & Co. KG · Bachmühle 2 · D-74673 Mulfingen · Phone +49 (0) 7938 81-0 · Fax +49 (0) 7938 81-110 · info1@de.ebmpapst.com · www.ebmpapst.com