A4E350-AA06-65

AC axial fan

straight blades (A series)

ebm-papst Mulfingen GmbH & Co. KG
Bachmühle 2 · D-74673 Mulfingen
Phone +49 7938 81-0
Fax +49 7938 81-110
info1@de.ebmpapst.com
www.ebmpapst.com

Limited partnership · Headquarters Mulfingen
County court Stuttgart · HRA 590344

General partner Elektrobau Mulfingen GmbH · Headquarters Mulfingen
County court Stuttgart · HRB 590142

ErP2015 EXCEEDS THE NORM

Nominal data

Type	**A4E350-AA06-65**
Motor	**M4E068-EC**

Phase		1~	1~	1~
Nominal voltage	VAC	230	230	230
Frequency	Hz	50	60	60
Type of data definition		fa	fa	fa
Valid for approval / standard		CE	CE	UL
Speed	min^{-1}	1390	1550	1550
Power input	W	140	195	205
Current draw	A	0.62	0.86	0.9
Motor capacitor	µF	5	5	5
Capacitor voltage	VDB	400	400	400
Capacitor standard		P0 (CE)	P0 (CE)	UL
Max. back pressure	Pa	120	90	90
Max. ambient temperature	°C	70	50	50
Starting current	A	1.4	1.3	1.3

ml = max. load · me = max. efficiency · fa = running at free air · cs = customer specs · cu = customer unit
Subject to alterations

Data according to ErP directive

Installation category	A
Efficiency category	Static
Variable speed drive	No
Specific ratio*	1.00

* Specific ratio = 1 + p_{fs} / 100 000 Pa

		Actual	Request 2013	Request 2015
Overall efficiency η_{es}		28.5	24.5	28.5
Efficiency grade N		40	36	40
Power input P_e	kW	0.15		
Air flow q_v	m^3/h	1880		
Pressure increase p_{fs}	Pa	80		
Speed n	min^{-1}	1360		

Data established at point of optimum efficiency

AC axial fan

straight blades (A series)

Technical features

Mass	3.35 kg
Size	350 mm
Surface of rotor	Coated in black
Material of impeller	Sheet steel, hot-dip galvanised
Number of blades	5
Direction of air flow	"V"
Direction of rotation	Counter-clockwise, seen on rotor
Type of protection	IP 44
Insulation class	"F"
Humidity class	F2-2
Max. permissible ambient motor temp. (transp./ storage)	+ 80 °C
Min. permissible ambient motor temp. (transp./storage)	- 40 °C
Mounting position	Shaft horizontal or rotor on bottom; rotor on top on request
Condensate discharge holes	Rotor-side
Operation mode	S1
Motor bearing	Ball bearing
Touch current acc. IEC 60990 (measuring network Fig. 4, TN system)	< 0.75 mA
Electrical leads	Capacitor mounted
Motor protection	Thermal overload protector (TOP) wired internally
Cable exit	Lateral
Protection class	I (if protective earth is connected by customer)
Product conforming to standard	EN 60335-1; CE
Approval	CCC

ebm-papst Mulfingen GmbH & Co. KG · Bachmühle 2 · D-74673 Mulfingen · Phone +49 (0) 7938 81-0 · Fax +49 (0) 7938 81-110 · info1@de.ebmpapst.com · www.ebmpapst.com

AC axial fan

straight blades (A series)

Product drawing

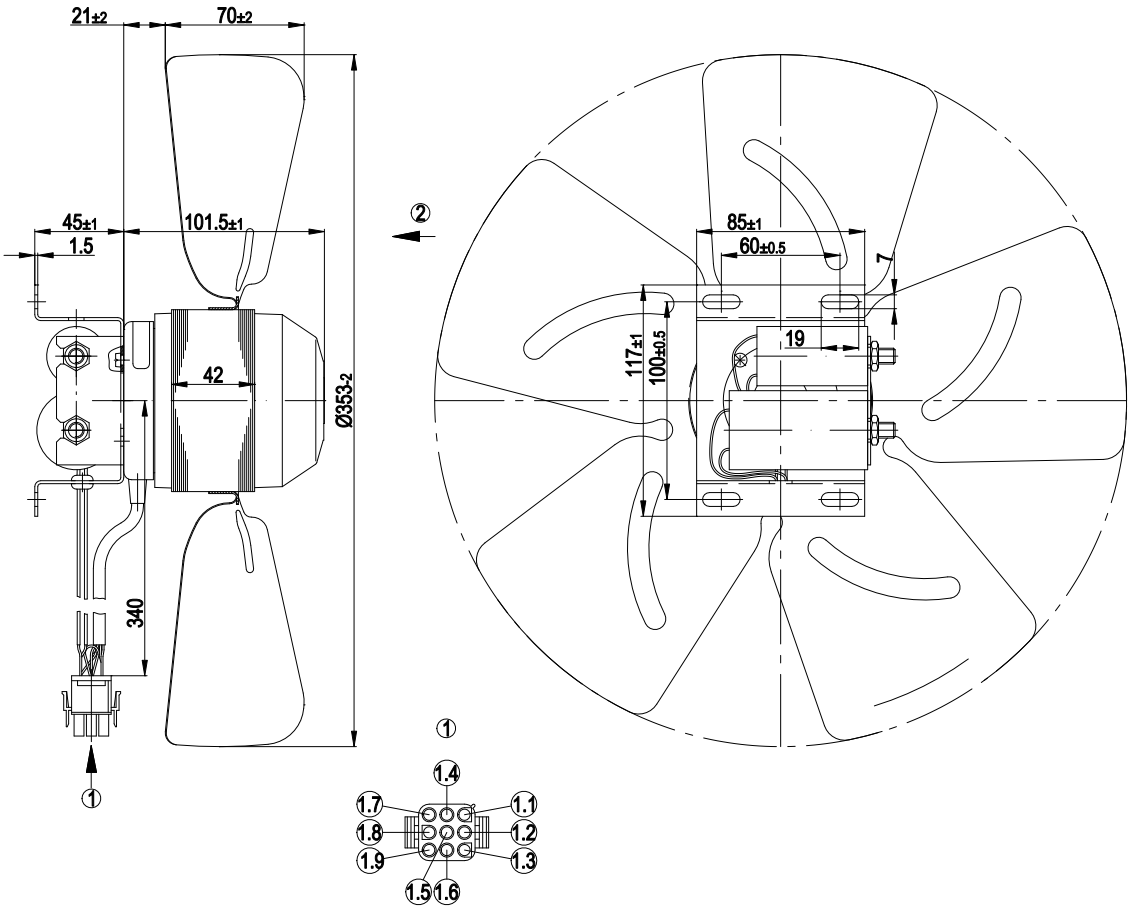

1	Connector housing AMP, Universal Mate-N-Lok
1.1	black + yellow
1.2	Capacitor (5µF)
1.3	Capacitor (5µF)
1.4	blue + capacitor (12µF)
1.5	brown
1.6	yellow
1.7	Capacitor (12µF)
1.8	vacant
1.9	green/yellow
2	Direction of air flow "V"

ebm-papst Mulfingen GmbH & Co. KG · Bachmühle 2 · D-74673 Mulfingen · Phone +49 (0) 7938 81-0 · Fax +49 (0) 7938 81-110 · info1@de.ebmpapst.com · www.ebmpapst.com

AC axial fan

straight blades (A series)

Connection screen

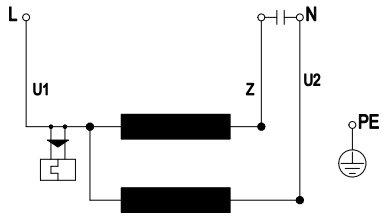

U1	blue	Z	brown	U2	black
PE	green/yellow				

ebm-papst Mulfingen GmbH & Co. KG · Bachmühle 2 · D-74673 Mulfingen · Phone +49 (0) 7938 81-0 · Fax +49 (0) 7938 81-110 · info1@de.ebmpapst.com · www.ebmpapst.com

AC axial fan

straight blades (A series)

Charts: Air flow 50 Hz

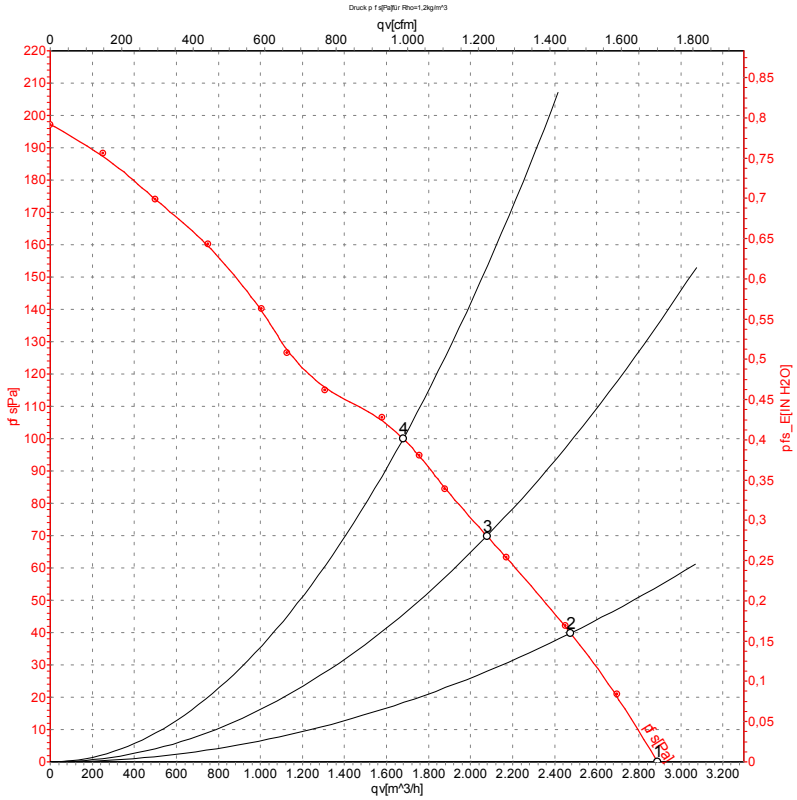

Measurement: LU-64421

Air performance measured as per ISO 5801 Installation category A. For detailed information on the measuring set-up, please contact ebm-papst. Suction-side noise levels: LwA measured as per ISO 13347 / LpA measured with 1m distance to fan axis. The values given are valid under the measuring conditions mentioned above and may vary according to the actual installation situation. With any deviation from the standard set-up, the specific values have to be checked and reviewed with the unit installed.

Measured values

	U	f	n	P_e	I	qv	p_{fs}
	V	Hz	min^{-1}	W	A	m^3/h	Pa
1	230	50	1390	140	0.62	2890	0
2	230	50	1370	143	0.63	2475	40
3	230	50	1360	149	0.65	2080	70
4	230	50	1330	167	0.73	1680	100

U = Supply voltage · f = Frequency · n = Speed · P_e = Power input · I = Current draw · qv = Air flow · p_{fs} = Pressure increase

ebm-papst Mulfingen GmbH & Co. KG · Bachmühle 2 · D-74673 Mulfingen · Phone +49 (0) 7938 81-0 · Fax +49 (0) 7938 81-110 · info1@de.ebmpapst.com · www.ebmpapst.com

AC axial fan

straight blades (A series)

Charts: Air flow 60 Hz

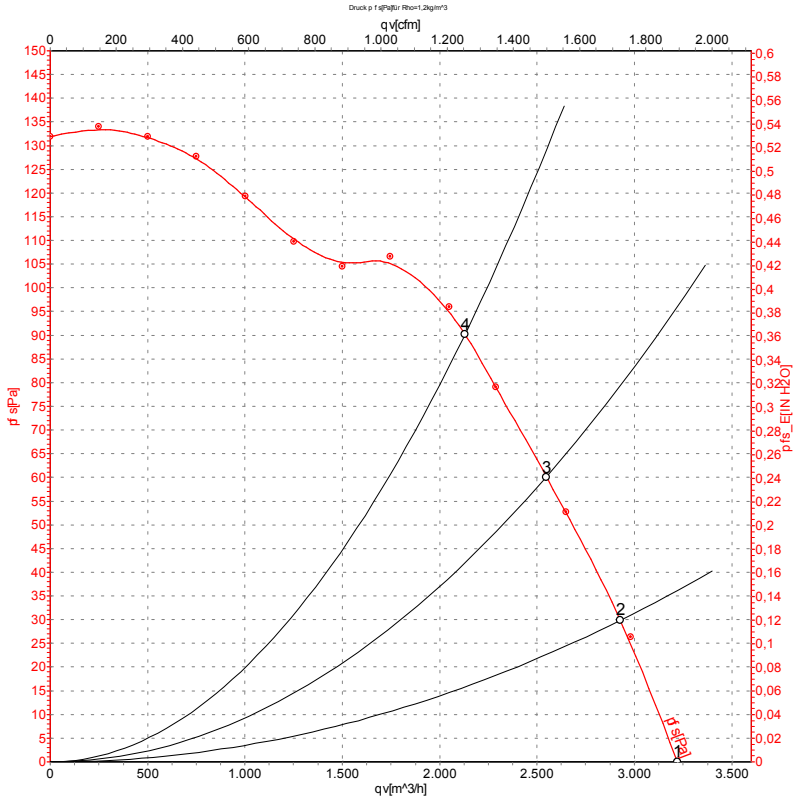

Measurement: LU-64461

Air performance measured as per ISO 5801 Installation category A. For detailed information on the measuring set-up, please contact ebm-papst. Suction-side noise levels: LwA measured as per ISO 13347 / LpA measured with 1m distance to fan axis. The values given are valid under the measuring conditions mentioned above and may vary according to the actual installation situation. With any deviation from the standard set-up, the specific values have to be checked and reviewed with the unit installed.

Measured values

	U	f	n	P_e	I	qv	p_{fs}
	V	Hz	min^{-1}	W	A	m^3/h	Pa
1	230	60	1550	195	0.86	3220	0
2	230	60	1520	202	0.88	2925	30
3	230	60	1495	210	0.91	2550	60
4	230	60	1475	216	0.94	2130	90

U = Supply voltage · f = Frequency · n = Speed · P_e = Power input · I = Current draw · qv = Air flow · p_{fs} = Pressure increase

ebm-papst Mulfingen GmbH & Co. KG · Bachmühle 2 · D-74673 Mulfingen · Phone +49 (0) 7938 81-0 · Fax +49 (0) 7938 81-110 · info1@de.ebmpapst.com · www.ebmpapst.com