A6D800-AE01-01

AC axial fan - HyBlade®

sickled blades (S series)



ebm-papst Mulfingen GmbH & Co. KG
Bachmühle 2 · D-74673 Mulfingen
Phone +49 7938 81-0
Fax +49 7938 81-110
info1@de.ebmpapst.com
www.ebmpapst.com

Limited partnership · Headquarters Mulfingen
County court Stuttgart · HRA 590344

General partner Elektrobau Mulfingen GmbH · Headquarters Mulfingen
County court Stuttgart · HRB 590142

ErP2015 EXCEEDS THE NORM

Nominal data

Type	**A6D800-AE01-01**
Motor	**M6D138-LA**

Phase		3~	3~	3~	3~
Nominal voltage	VAC	400	400	480	480
Connection		Δ	Y	Δ	Y
Frequency	Hz	50	50	60	60
Type of data definition		ml	ml	ml	ml
Valid for approval / standard		CE	CE	CE	CE
Speed	min^{-1}	910	730	1090	850
Power input	W	1570	1060	2060	1350
Current draw	A	3.42	1.98	3.75	2.20
Max. back pressure	Pa	170	105	120	70
Min. ambient temperature	°C	-40	-40	-40	-40
Max. ambient temperature	°C	70	70	55	55
Starting current	A	13	4.4	14	4.7

ml = Max. load · me = Max. efficiency · fa = Running at free air · cs = Customer specs · cu = Customer unit
Subject to alterations

Data according to ErP directive

Installation category	A
Efficiency category	Static
Variable speed drive	No
Specific ratio*	1.00

* Specific ratio = 1 + p_{fs} / 100 000 Pa

		Actual	Request 2013	Request 2015
Overall efficiency η_{es}	%	37.3	30.6	34.6
Efficiency grade N		42.7	36	40
Power input P_e	kW	1.4		
Air flow q_v	m^3/h	14480		
Pressure increase p_{fs}	Pa	131		
Speed n	min^{-1}	925		

Data definition with optimum efficiency. LU-113300
The ErP data is determined using a motor-impeller combination in a standardised measurement configuration.

ebmpapst

AC axial fan - HyBlade®

sickled blades (S series)

Technical features

Mass	24.4 kg
Size	800 mm
Surface of rotor	Cast in aluminium
Material of terminal box	PP plastic
Material of blades	Aluminium sheet insert, sprayed with PP plastic
Number of blades	5
Blade angle	-5
Direction of air flow	"V"
Direction of rotation	Clockwise, seen on rotor
Type of protection	IP 54
Insulation class	"F"
Humidity class	F3-1
Max. permissible ambient motor temp. (transp./ storage)	+ 80 °C
Min. permissible ambient motor temp. (transp./storage)	- 40 °C
Mounting position	Any
Condensate discharge holes	On rotor and stator sides
Operation mode	S1
Motor bearing	Ball bearing
Touch current acc. IEC 60990 (measuring network Fig. 4, TN system)	<= 3.5 mA
Electrical leads	Via terminal box
Motor protection	Thermal overload protector (TOP) brought out
Cable exit	Axial
Protection class	I (if protective earth is connected by customer)
Product conforming to standard	EN 60034; EN 61800-5-1; CE
Approval	VDE; EAC

ebm-papst Mulfingen GmbH & Co. KG · Bachmühle 2 · D-74673 Mulfingen · Phone +49 (0) 7938 81-0 · Fax +49 (0) 7938 81-110 · info1@de.ebmpapst.com · www.ebmpapst.com

AC axial fan - HyBlade®

sickled blades (S series)

Product drawing

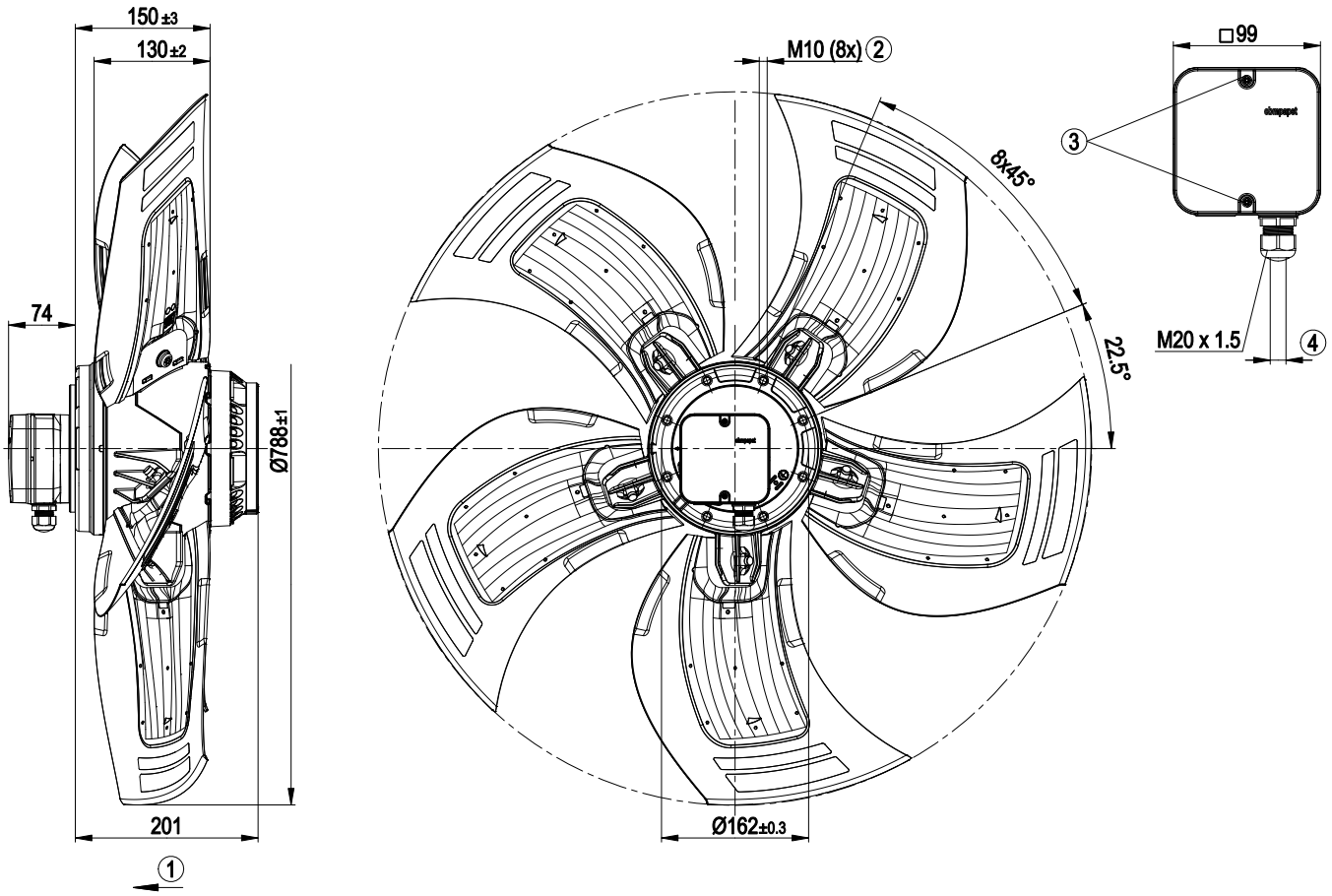

1	Direction of air flow "V"
2	Depth of screw max. 18 mm
3	Tightening torque 1.5±0.2 Nm
4	Cable diameter: min. 7 mm, max. 14 mm; tightening torque: 2±0.3 Nm

ebm-papst Mulfingen GmbH & Co. KG · Bachmühle 2 · D-74673 Mulfingen · Phone +49 (0) 7938 81-0 · Fax +49 (0) 7938 81-110 · info1@de.ebmpapst.com · www.ebmpapst.com

AC axial fan - HyBlade®

sickled blades (S series)

Connection screen

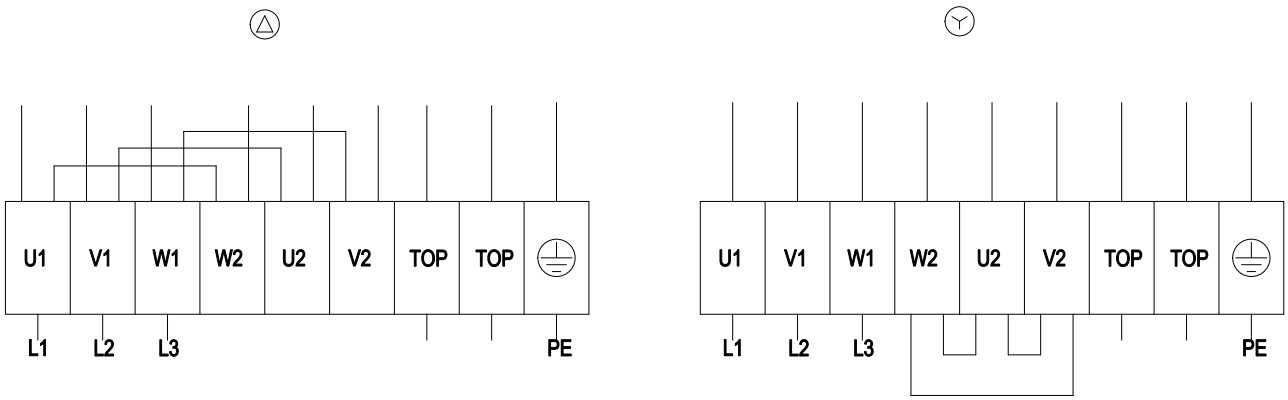

Δ	Delta connection	Y	Star connection	L1	= U1 = black
L2	= V1 = blue	L3	= W1 = brown	W2	yellow
U2	green	V2	white	TOP	2 x grey
PE	green/yellow				

ebm-papst Mulfingen GmbH & Co. KG · Bachmühle 2 · D-74673 Mulfingen · Phone +49 (0) 7938 81-0 · Fax +49 (0) 7938 81-110 · info1@de.ebmpapst.com · www.ebmpapst.com

AC axial fan - HyBlade®

sickled blades (S series)

Charts: Air flow 50 Hz

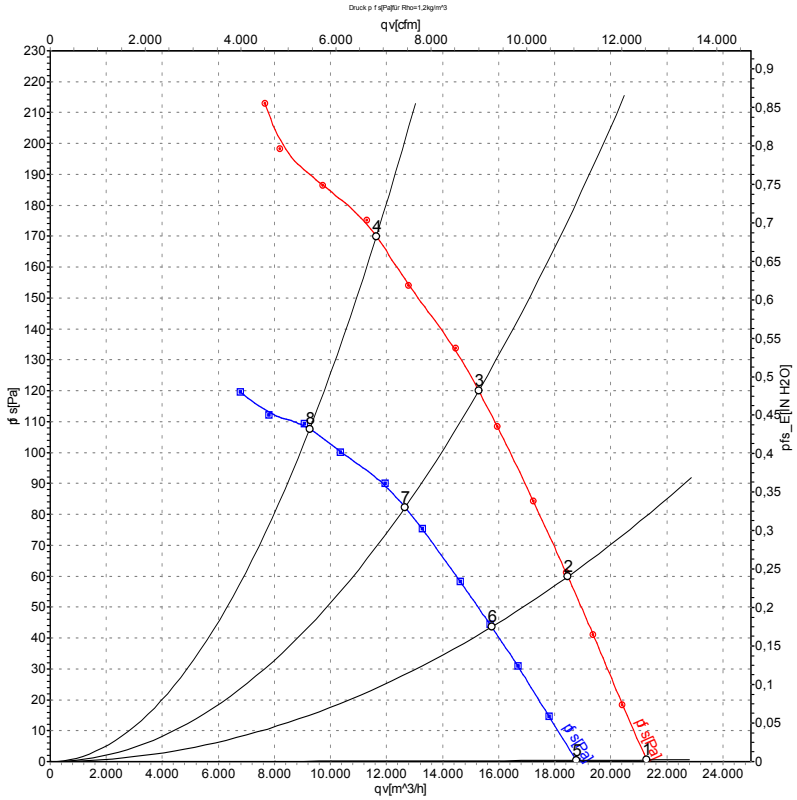

Air performance measured as per ISO 5801 Installation category A. For detailed information on the measuring set-up, please contact ebm-papst. Suction-side noise levels: LwA measured as per ISO 13347 / LpA measured with 1m distance to fan axis. The values given are valid under the measuring conditions mentioned above and may vary according to the actual installation situation. With any deviation from the standard set-up, the specific values have to be checked and reviewed with the unit installed.

Measured values

	Conn.	U	f	n	P_e	I	LpA_{in}	LwA_{in}	LwA_{out}	qv	p_{fs}
		V	Hz	min^{-1}	W	A	dB(A)	dB(A)	dB(A)	m^3/h	Pa
1	Δ	400	50	950	999	2.80	67	73	73	21280	0
2	Δ	400	50	940	1205	2.98	64	70	70	18470	60
3	Δ	400	50	925	1373	3.16	67	73	72	15290	120
4	Δ	400	50	910	1570	3.42	71	78	77	11640	170
5	Y	400	50	845	768	1.46	64	70	70	18770	0
6	Y	400	50	800	896	1.70	60	66	65	15750	44
7	Y	400	50	765	979	1.86	62	68	67	12660	82
8	Y	400	50	730	1060	1.98	65	72	71	9260	105

Conn. = Connection · U = Supply voltage · f = Frequency · n = Speed · P_e = Power input · I = Current draw · LpA_{in} = Sound pressure level inlet side · LwA_{in} = Sound power level inlet side
LwA_{out} = Sound power level outlet side · qv = Air flow · p_{fs} = Pressure increase

ebm-papst Mulfingen GmbH & Co. KG · Bachmühle 2 · D-74673 Mulfingen · Phone +49 (0) 7938 81-0 · Fax +49 (0) 7938 81-110 · info1@de.ebmpapst.com · www.ebmpapst.com

AC axial fan - HyBlade®

sickled blades (S series)

Charts: Air flow 60 Hz

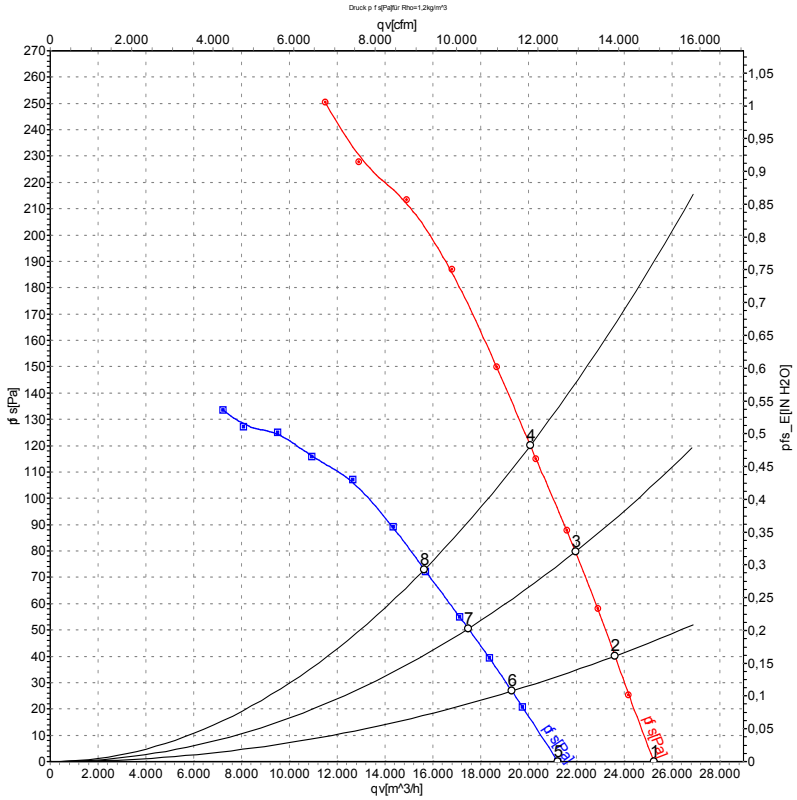

Air performance measured as per ISO 5801 Installation category A. For detailed information on the measuring set-up, please contact ebm-papst. Suction-side noise levels: LwA measured as per ISO 13347 / LpA measured with 1m distance to fan axis. The values given are valid under the measuring conditions mentioned above and may vary according to the actual installation situation. With any deviation from the standard set-up, the specific values have to be checked and reviewed with the unit installed.

Measured values

	Conn.	U	f	n	P_e	I	LpA_{in}	LwA_{in}	LwA_{out}	qv	p_{fs}
		V	Hz	min^{-1}	W	A	dB(A)	dB(A)	dB(A)	m^3/h	Pa
1	Δ	480	60	1125	1576	3.23	71	78	78	25250	0
2	Δ	480	60	1115	1744	3.38	69	76	76	23620	40
3	Δ	480	60	1100	1907	3.56	68	75	75	21970	80
4	Δ	480	60	1090	2060	3.75	69	75	75	20080	120
5	Y	480	60	945	1161	1.89	66	73	73	21240	0
6	Y	480	60	910	1237	2.02	64	70	70	19310	27
7	Y	480	60	880	1296	2.13	62	69	69	17490	50
8	Y	480	60	850	1350	2.20	62	69	68	15650	70

Conn. = Connection · U = Supply voltage · f = Frequency · n = Speed · P_e = Power input · I = Current draw · LpA_{in} = Sound pressure level inlet side · LwA_{in} = Sound power level inlet side
LwA_{out} = Sound power level outlet side · qv = Air flow · p_{fs} = Pressure increase

ebm-papst Mulfingen GmbH & Co. KG · Bachmühle 2 · D-74673 Mulfingen · Phone +49 (0) 7938 81-0 · Fax +49 (0) 7938 81-110 · info1@de.ebmpapst.com · www.ebmpapst.com