A6D800-AS01-01

AC axial fan

sickled blades (S series)



ebm-papst Mulfingen GmbH & Co. KG
Bachmühle 2
D-74673 Mulfingen
Phone: +49(0)7938/81-0
Fax: +49(0)7938/81-110
info1@de.ebmpapst.com
www.ebmpapst.com

Nominal data

Type	**A6D800-AS01-01**
Motor	**M6D138-NA**

Phase		3~	3~
Nominal voltage	V	400	400
Connection		**D**	Y
Frequency	Hz	50	50
Type of data definition		ml	ml
Valid for approval / standard		CE	CE
Speed	min^{-1}	910	730
Power input	W	2180	1470
Current draw	A	5.17	2.8
Max. back pressure	Pa	120	75
Max. ambient temperature	°C	55	55

ml = max. load · me = max. efficiency · rfa = running at free air · cs = customer specs · cu = customer unit
Subject to alterations

AC axial fan

sickled blades (S series)

Technical features

Leackage current	<= 3.5 mA
Size	800 mm
Operation mode	S1
Direction of rotation	Clockwise, seen on rotor
Mounting position	Any
Electrical leads	Via terminal box
Humidity class	F3-1
Blade angle	+ 5
Direction of air flow	"V"
Insulation class	"F"
Cable exit	Axial
Condensate discharge holes	On rotor and stator sides
Motor bearing	Ball bearing
Mass	29 kg
Material of terminal box	Plastic, fibreglass reinforced
Material of blades	Die-cast aluminium
Motor protection	Thermal overload protector (TOP) brought out
Product conforming to standard	CE; EN 61800-5-1; EN 60034
Surface of rotor	Cast in aluminium
Number of blades	5
Type of protection	IP 54
Protection class	I
Max. permissible ambient motor temp. (transp./ storage)	+ 80 °C
Min. permissible ambient motor temp. (transp./storage)	- 40 °C
Approval	VDE

ebm-papst Mulfingen GmbH & Co. KG · Bachmühle 2 · D-74673 Mulfingen · Phone: +49(0)7938/81-0 · Fax: +49(0)7938/81-110 · info1@de.ebmpapst.com · www.ebmpapst.com

AC axial fan

sickled blades (S series)

Product drawing

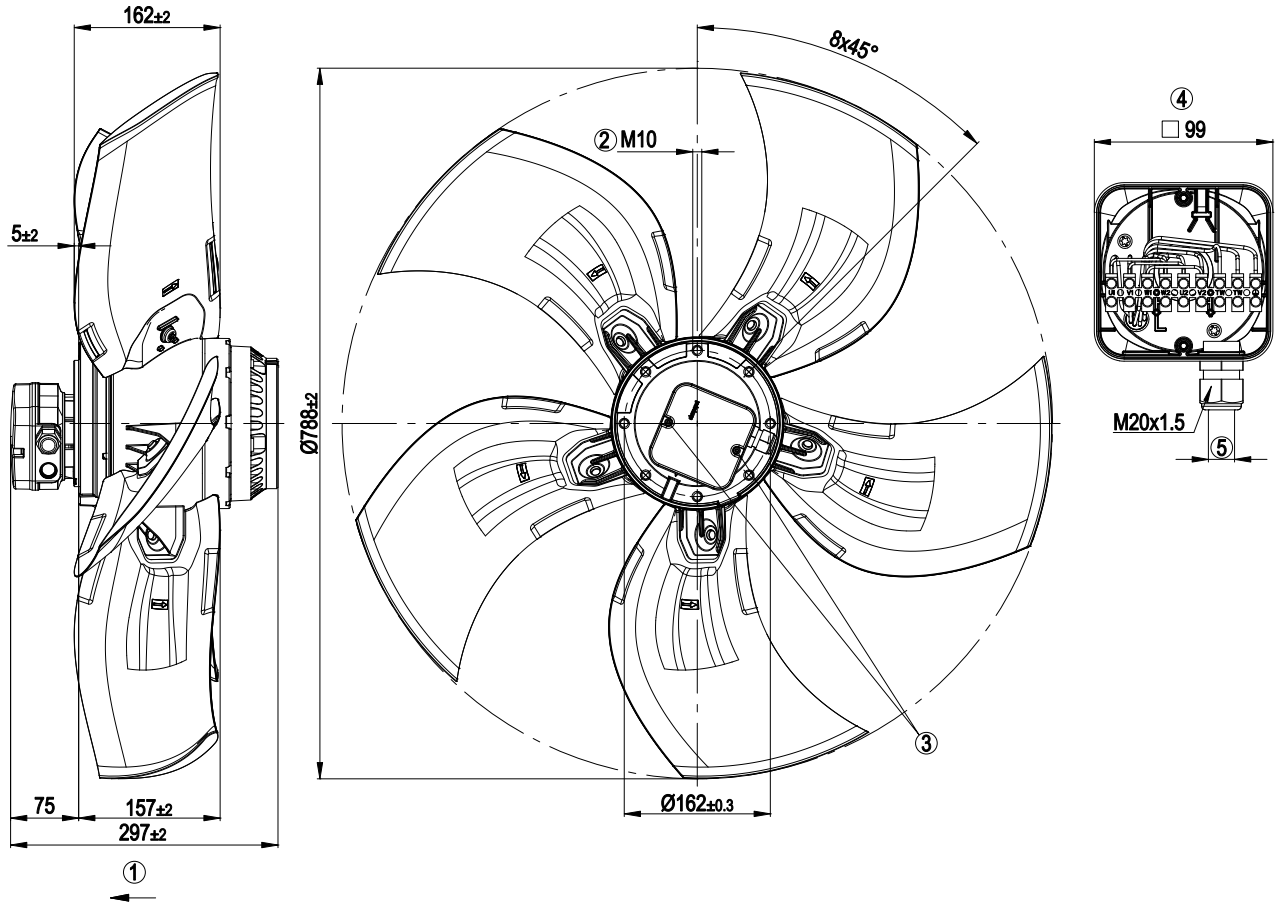

1	Direction of air flow "V"
2	Screw depth max. 18 mm
3	Tightening torque 1.5 Nm±0.2 Nm
4	Shown without terminal box cover
5	Cable diameter min. 7 mm, max. 14 mm, tightening torque 2 Nm ±0.3 Nm

ebm-papst Mulfingen GmbH & Co. KG · Bachmühle 2 · D-74673 Mulfingen · Phone: +49(0)7938/81-0 · Fax: +49(0)7938/81-110 · info1@de.ebmpapst.com · www.ebmpapst.com

AC axial fan

sickled blades (S series)

Connection screen

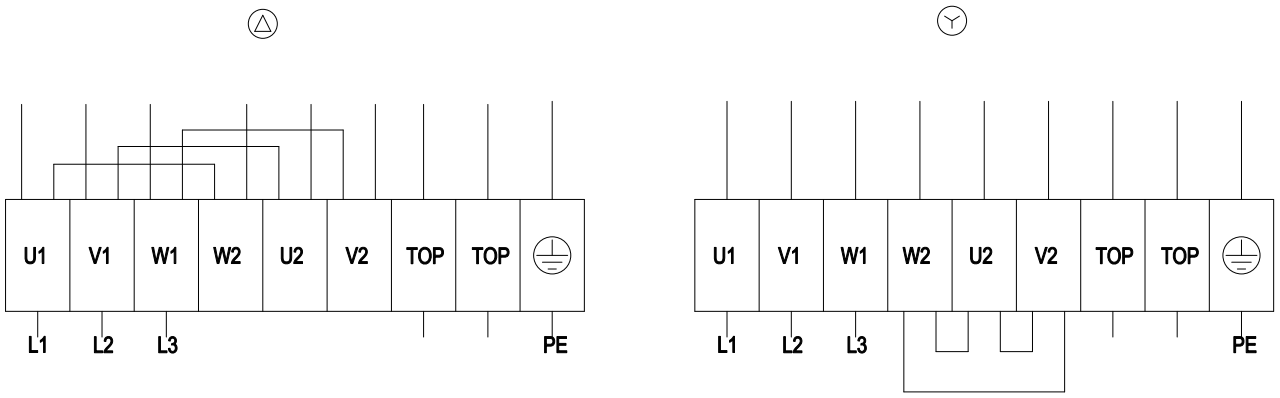

Note: Direction of rotation changes when two phases are reversed

Δ	Delta-connection	Y	Star connection	L1	= U1 = black
L2	= V1 = blue	L3	= W1 = brown	W2	yellow
U2	green	V2	white	TOP	2 x grey
PE	green / yellow				

ebm-papst Mulfingen GmbH & Co. KG · Bachmühle 2 · D-74673 Mulfingen · Phone: +49(0)7938/81-0 · Fax: +49(0)7938/81-110 · info1@de.ebmpapst.com · www.ebmpapst.com

AC axial fan

sickled blades (S series)

Charts: Air flow 50 Hz

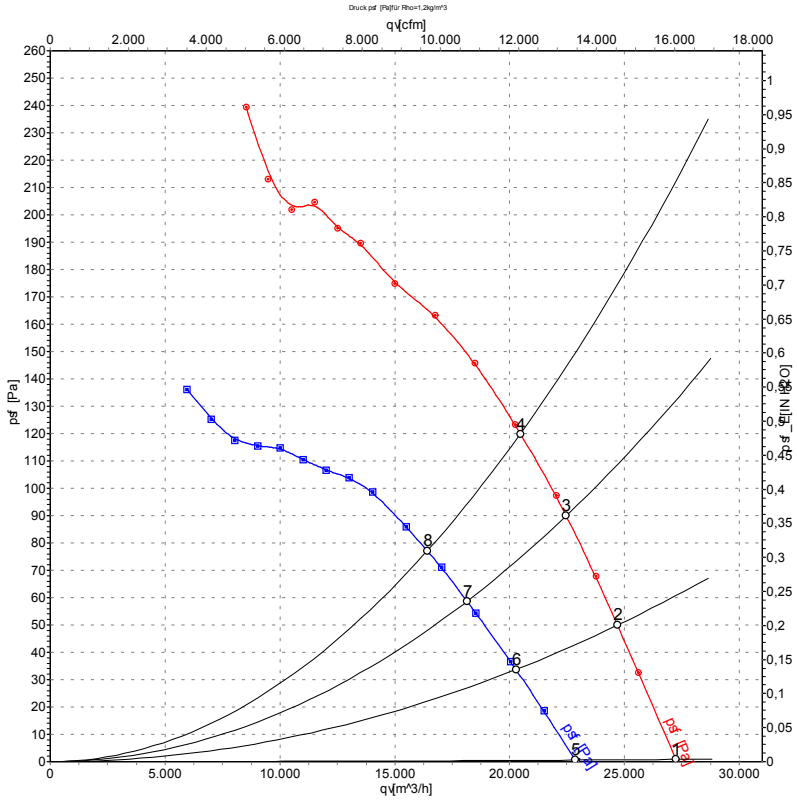

Measurement: LU-100793
Measurement: LU-100795

Air performance measured as per ISO 5801 Installation Category A. For detailed information on the measuring set-up, please contact ebm-papst. Suction-side noise levels: LwA measured as per ISO 13347 / LpA measured with 1m distance to fan axis. The values given are valid under the measuring conditions mentioned above and may vary according to the actual installation situation. With any deviation from the standard set-up, the specific values have to be checked and reviewed with the unit installed.

Measured values

	Conn.	U	f	n	P_1	I	LpA_{in}	LpA_{out}	LwA_{in}	qv	p_{sf}
		V	Hz	min^{-1}	W	A	dB(A)	dB(A)	dB(A)	m^3/h	Pa
1	Δ	400	50	925	1872	4.83	68	75	75	27270	0
2	Δ	400	50	920	2012	4.99	67	71	74	24690	50
3	Δ	400	50	915	2110	5.15	67	66	74	22460	90
4	Δ	400	50	910	2180	5.17	68	65	75	20470	120
5	Y	400	50	780	1333	2.55	64	69	71	22900	0
6	Y	400	50	755	1398	2.67	63	65	69	20280	34
7	Y	400	50	740	1442	2.75	63	60	69	18140	59
8	Y	400	50	730	1467	2.80	63	59	71	16420	77

ebm-papst Mulfingen GmbH & Co. KG · Bachmühle 2 · D-74673 Mulfingen · Phone: +49(0)7938/81-0 · Fax: +49(0)7938/81-110 · info1@de.ebmpapst.com · www.ebmpapst.com