**A6D800-AU01-01**

# AC axial fan - HyBlade®

sickled blades (S series)

**ebm-papst Mulfingen GmbH & Co. KG**
Bachmühle 2
74673 Mulfingen
Phone: +49 7938 81-0
Fax: +49 7938 81-110
www.ebmpapst.com
info1@de.ebmpapst.com

## Nominal data

| | |
|---|---|
| **Type** | **A6D800-AU01-01** |
| **Motor** | **M6D138-NA** |

| | | | |
|---|---|---|---|
| Phase | | 3~ | 3~ |
| Nominal voltage | [V] | 400 | 400 |
| Connection | | **D** | Y |
| Frequency | [Hz] | 50 | 50 |
| Type of data definition | | ml | ml |
| Valid for approval / standard | | CE | CE |
| Speed | [min$^{-1}$] | 900 | 700 |
| Power input | [W] | 2330 | 1590 |
| Current draw | [A] | 4.85 | 2.87 |
| Max. back pressure | [Pa] | 120 | 75 |
| Max. ambient temperature | [°C] | 50 | 50 |

ml = max. load · me = max. efficiency · rfa = running at free air · cs = customer specs · cu = customer unit
Subject to alterations

# AC axial fan - HyBlade®

sickled blades (S series)

## Technical features

| | |
|---|---|
| **Leackage current** | <= 3,5 mA |
| **Size** | 800 mm |
| **Operation mode** | S1 |
| **Direction of rotation** | Clockwise, seen on rotor |
| **Mounting position** | Shaft horizontal or rotor on bottom; rotor on top on request |
| **Electrical leads** | Via terminal box |
| **Humidity class** | F3-1 |
| **Blade angle** | 5 |
| **Direction of air flow** | "V" |
| **Insulation class** | "F" |
| **Cable exit** | Axial |
| **Condensate discharge holes** | Rotor-side |
| **Bearing motor** | Ball bearing |
| **Mass** | 33 kg |
| **Material of terminal box** | ABS Plastic, black |
| **Material of blades** | Aluminium sheet insert, sprayed with PP plastic |
| **Motor protection** | Thermal overload protector (TOP) brought out |
| **Product conforming to standard** | CE; EN 61800-5-1; EN 60034 |
| **Surface of rotor** | Cast in aluminium |
| **Number of blades** | 5 |
| **Type of protection** | IP 54 |
| **Protection class** | I |
| **Max. permissible ambient motor temp. (transp./ storage)** | + 80 °C |
| **Min. permissible ambient motor temp. (transp./storage)** | - 40 °C |
| **Approval** | VDE |



ebm-papst Mulfingen GmbH & Co. KG · Bachmühle 2 · 74673 Mulfingen · Phone: +49 7938 81-0 · Fax: +49 7938 81-110 · www.ebmpapst.com · info1@de.ebmpapst.com

# AC axial fan - HyBlade®

sickled blades (S series)

## Product drawing

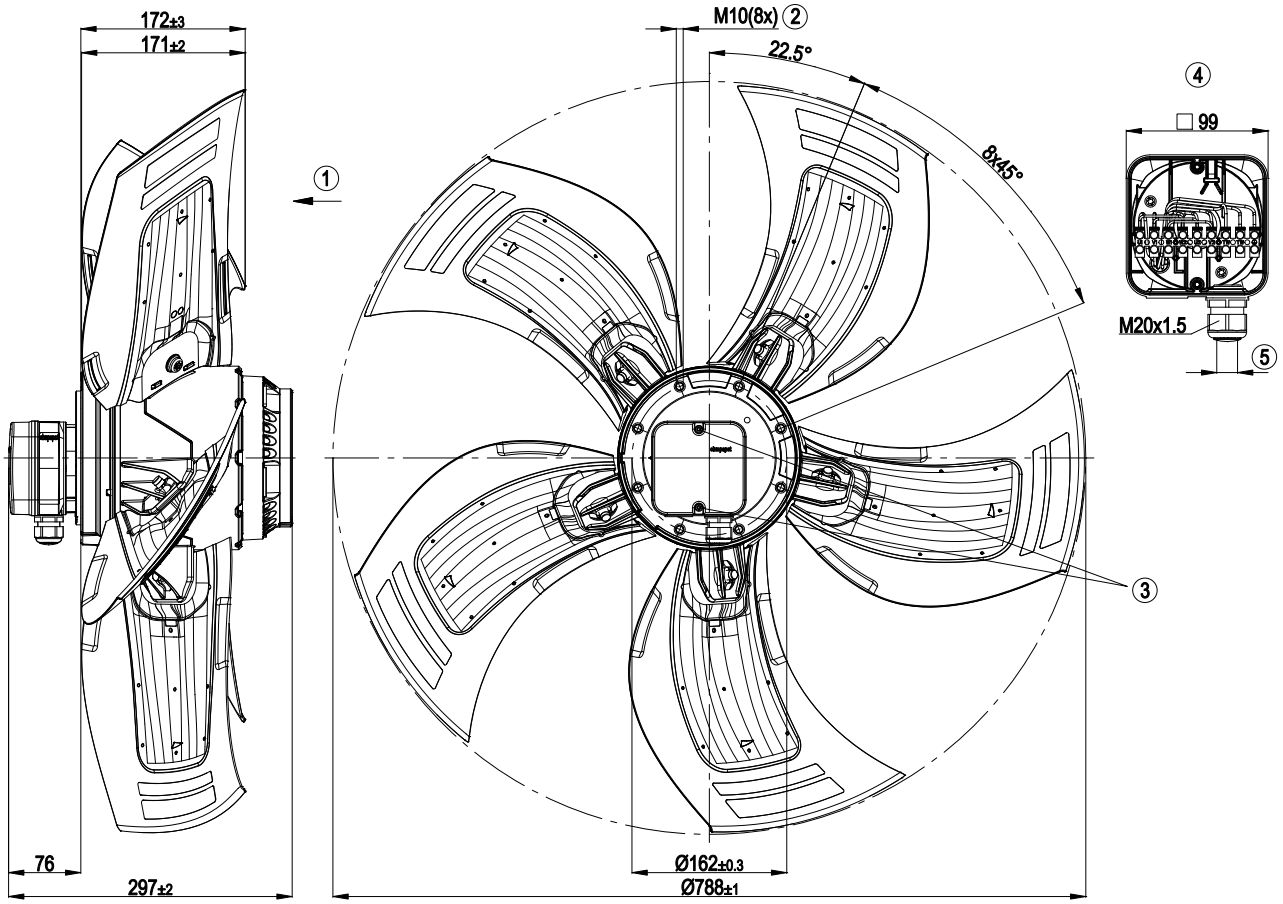


| | |
|---|---|
| 1 | Direction of air flow "V" |
| 2 | Depth of screw max. 18 mm |
| 3 | Tightening torque 0.8±0.3 Nm |
| 4 | Illustration without terminal box cover |
| 5 | Cable diameter: min. 7 mm, max. 14 mm; tightening torque: 2.0 0.15 Nm |



ebm-papst Mulfingen GmbH & Co. KG · Bachmühle 2 · 74673 Mulfingen · Phone: +49 7938 81-0 · Fax: +49 7938 81-110 · www.ebmpapst.com · info1@de.ebmpapst.com

# AC axial fan - HyBlade®

sickled blades (S series)

## Connection screen

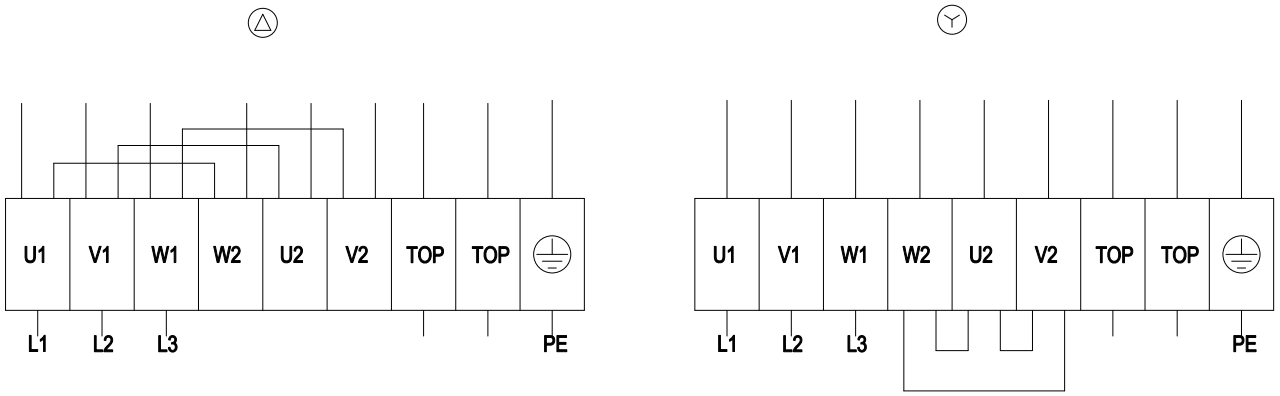


Note: Direction of rotation changes when two phases are reversed

| | | | | | |
|---|---|---|---|---|---|
| Δ | Delta-connection | Y | Star connection | L1 | = U1 = black |
| L2 | = V1 = blue | L3 | = W1 = brown | W2 | yellow |
| U2 | green | V2 | white | TOP | 2 x grey |
| PE | green / yellow | | | | |



ebm-papst Mulfingen GmbH & Co. KG · Bachmühle 2 · 74673 Mulfingen · Phone: +49 7938 81-0 · Fax: +49 7938 81-110 · www.ebmpapst.com · info1@de.ebmpapst.com

# AC axial fan - HyBlade®

sickled blades (S series)

## Charts: Air flow 50 Hz

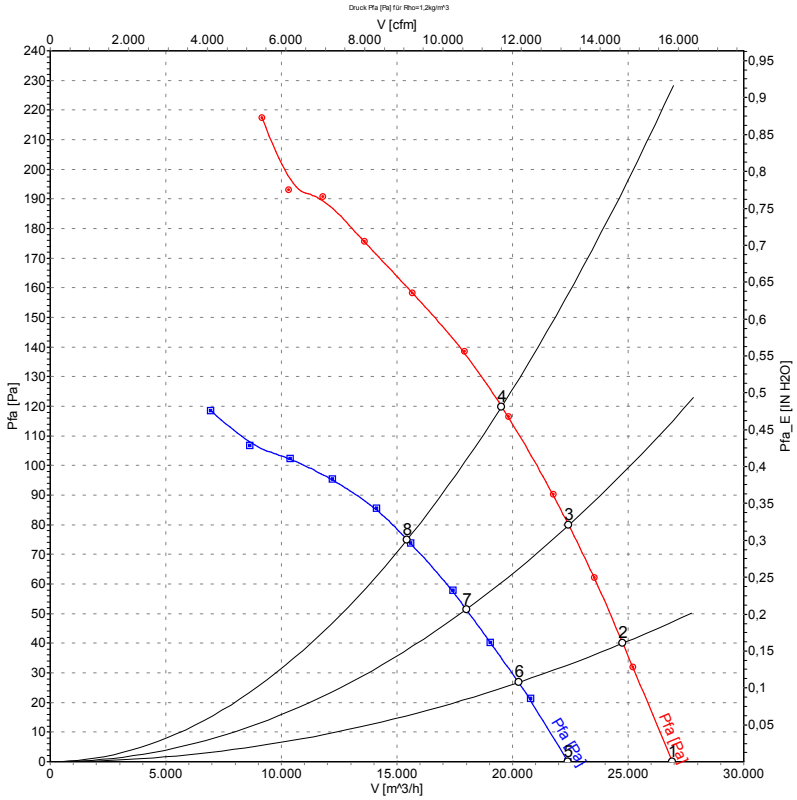


Measurement: LU-113289
Measurement: LU-113294

## Measured values

| | Conn. | U | f | n | $P_1$ | I | $LpA_{ss}$ | $LpA_{ds}$ | $LwA_{ss}$ | $LwA_{ds}$ | $\dot{V}$ | $p_{fa}$ |
|---|---|---|---|---|---|---|---|---|---|---|---|---|
| | | [V] | [Hz] | [$min^{-1}$] | [W] | [A] | [dB(A)] | [dB(A)] | [dB(A)] | [dB(A)] | [$m^3/h$] | [Pa] |
| 1 | Δ | 400 | 50 | 925 | 1868 | 4.51 | 67 | 70 | 74 | 75 | 26920 | 0 |
| 2 | Δ | 400 | 50 | 920 | 1988 | 4.59 | 67 | 63 | 74 | 74 | 24770 | 40 |
| 3 | Δ | 400 | 50 | 910 | 2103 | 4.69 | 68 | 60 | 74 | 74 | 22430 | 80 |
| 4 | Δ | 400 | 50 | 900 | 2330 | 4.85 | 69 | 60 | 76 | 75 | 19530 | 120 |
| 5 | Y | 400 | 50 | 765 | 1336 | 2.47 | 62 | 63 | 69 | 69 | 22380 | 0 |
| 6 | Y | 400 | 50 | 750 | 1391 | 2.58 | 62 | 57 | 69 | 68 | 20260 | 27 |
| 7 | Y | 400 | 50 | 735 | 1443 | 2.68 | 62 | 54 | 69 | 68 | 18000 | 52 |
| 8 | Y | 400 | 50 | 720 | 1476 | 2.76 | 63 | 54 | 70 | 69 | 15440 | 75 |



ebm-papst Mulfingen GmbH & Co. KG · Bachmühle 2 · 74673 Mulfingen · Phone: +49 7938 81-0 · Fax: +49 7938 81-110 · www.ebmpapst.com · info1@de.ebmpapst.com