A6D910-AP01-01

AC axial fan

sickled blades (S series)

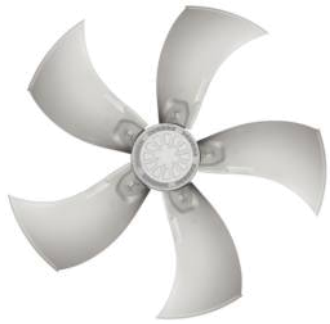

ebm-papst Mulfingen GmbH & Co. KG
Bachmühle 2 · D-74673 Mulfingen
Phone +49 7938 81-0
Fax +49 7938 81-110
info1@de.ebmpapst.com
www.ebmpapst.com

Limited partnership · Headquarters Mulfingen
County court Stuttgart · HRA 590344

General partner Elektrobau Mulfingen GmbH · Headquarters Mulfingen
County court Stuttgart · HRB 590142

ErP2015 EXCEEDS THE NORM

Nominal data

Type	**A6D910-AP01-01**
Motor	**M6D138-NA**

Phase		3~	3~
Nominal voltage	VAC	400	400
Connection		Δ	Y
Frequency	Hz	50	50
Type of data definition		ml	ml
Valid for approval / standard		CE	CE
Speed	min^{-1}	890	685
Power input	W	2450	1560
Current draw	A	5.2	2.9
Max. back pressure	Pa	160	95
Max. ambient temperature	°C	50	50
Starting current	A	18.6	6.2

ml = max. load · me = max. efficiency · fa = running at free air · cs = customer specs · cu = customer unit
Subject to alterations

Data according to ErP directive

Installation category	A
Efficiency category	Static
Variable speed drive	No
Specific ratio*	1.00

* Specific ratio = 1 + p_{fs} / 100 000 Pa

		Actual	Request 2013	Request 2015
Overall efficiency η_{es}		36	32	36
Efficiency grade N		40	36	40
Power input P_e	kW	2.37		
Air flow q_v	m^3/h	22005		
Pressure increase p_{fs}	Pa	137		
Speed n	min^{-1}	900		

Data established at point of optimum efficiency

ebmpapst

AC axial fan

sickled blades (S series)

Technical features

Mass	30.4 kg
Size	910 mm
Surface of rotor	Cast in aluminium
Material of terminal box	PP plastic
Material of blades	Die-cast aluminum
Number of blades	5
Blade angle	0°
Direction of air flow	"V"
Direction of rotation	Clockwise, seen on rotor
Type of protection	IP 54
Insulation class	"F"
Humidity class	F3-1
Max. permissible ambient motor temp. (transp./ storage)	+ 80 °C
Min. permissible ambient motor temp. (transp./storage)	- 40 °C
Mounting position	Any
Condensate discharge holes	On rotor and stator sides
Operation mode	S1
Motor bearing	Ball bearing
Touch current acc. IEC 60990 (measuring network Fig. 4, TN system)	<= 3.5 mA
Electrical leads	Via terminal box
Motor protection	Thermal overload protector (TOP) brought out
Cable exit	Axial
Protection class	I (if protective earth is connected by customer)
Product conforming to standard	EN 60034; EN 61800-5-1; CE
Approval	VDE

ebm-papst Mulfingen GmbH & Co. KG · Bachmühle 2 · D-74673 Mulfingen · Phone +49 (0) 7938 81-0 · Fax +49 (0) 7938 81-110 · info1@de.ebmpapst.com · www.ebmpapst.com

AC axial fan

sickled blades (S series)

Product drawing

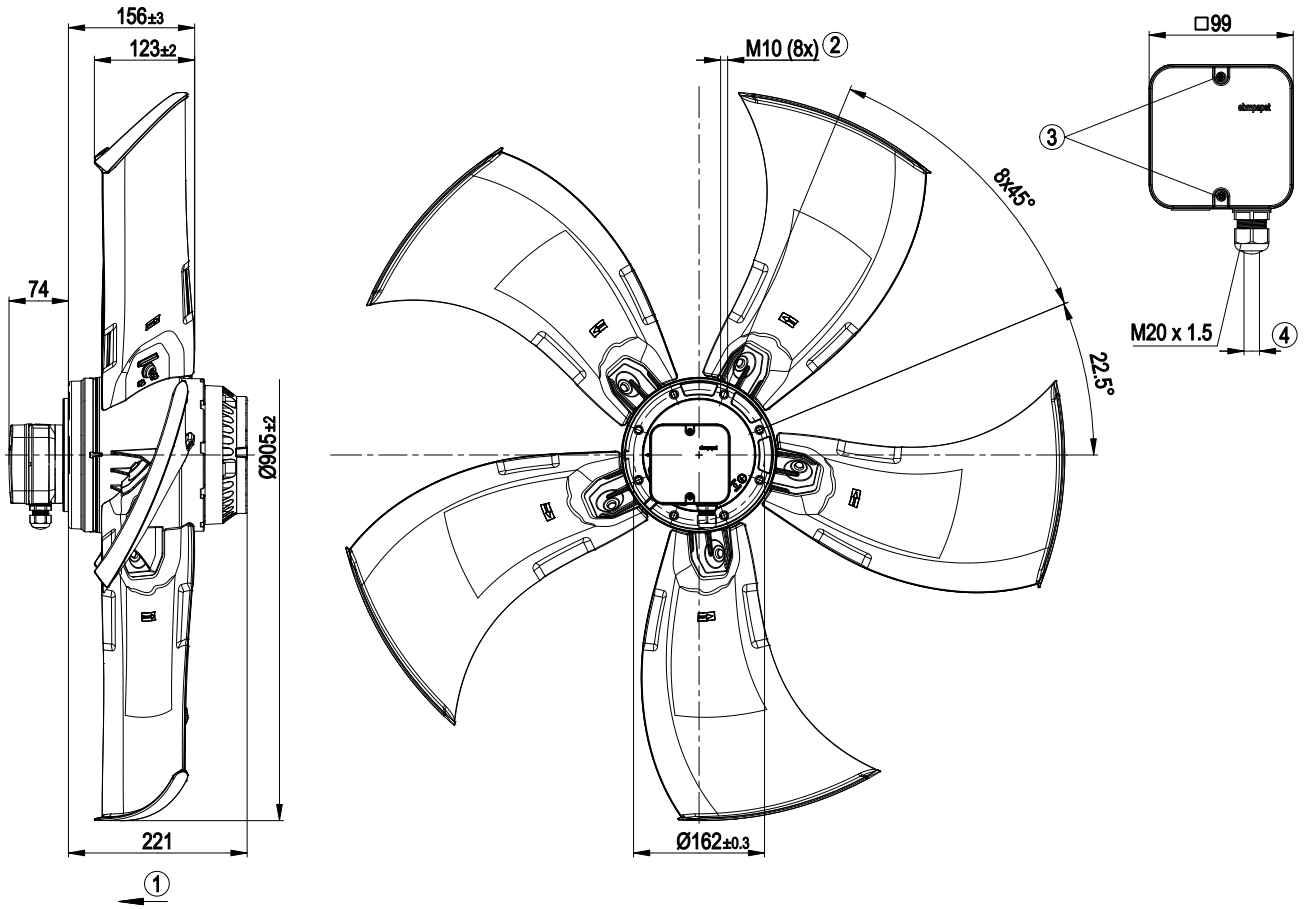

1	Direction of air flow "V"
2	Screw depth max. 18 mm
3	Tightening torque 1.5±0.2 Nm
4	Cable diameter: min. 7 mm, max. 14 mm; tightening torque: 2±0.3 Nm

ebm-papst Mulfingen GmbH & Co. KG · Bachmühle 2 · D-74673 Mulfingen · Phone +49 (0) 7938 81-0 · Fax +49 (0) 7938 81-110 · info1@de.ebmpapst.com · www.ebmpapst.com

AC axial fan

sickled blades (S series)

Connection screen

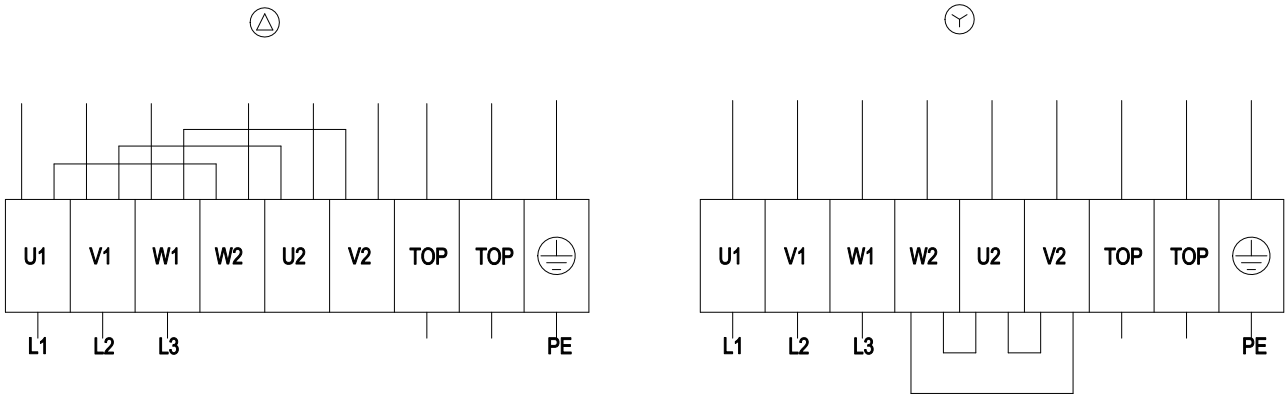

Δ	Delta connection	Y	Star connection	L1	= U1 = black
L2	= V1 = blue	L3	= W1 = brown	W2	yellow
U2	green	V2	white	TOP	2 x grey
PE	green/yellow				

ebm-papst Mulfingen GmbH & Co. KG · Bachmühle 2 · D-74673 Mulfingen · Phone +49 (0) 7938 81-0 · Fax +49 (0) 7938 81-110 · info1@de.ebmpapst.com · www.ebmpapst.com

AC axial fan

sickled blades (S series)

Charts: Air flow 50 Hz

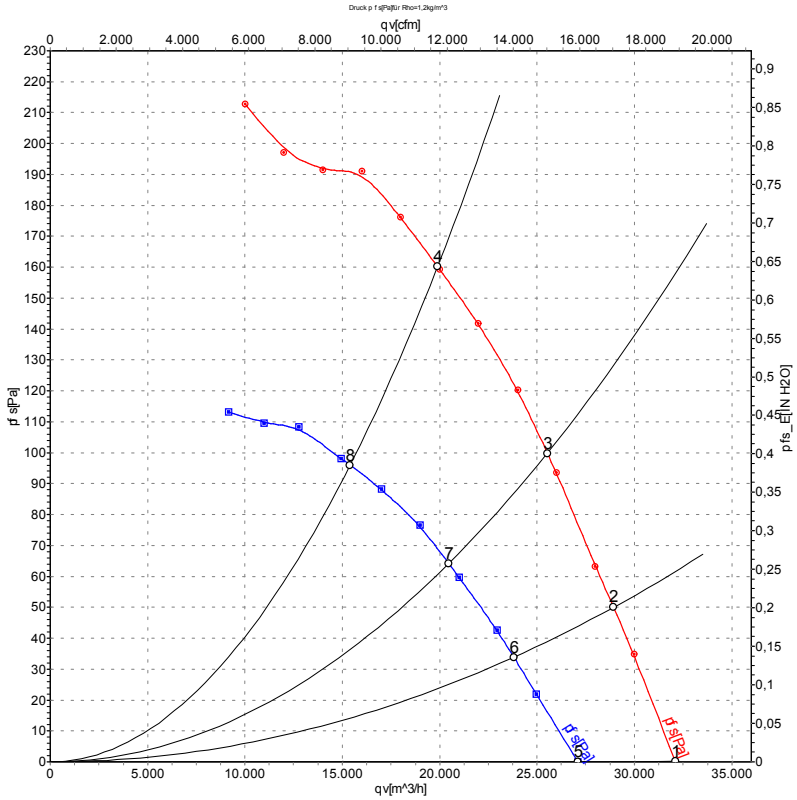

Measurement: LU-102343
Measurement: LU-102347

Air performance measured as per ISO 5801 Installation category A. For detailed information on the measuring set-up, please contact ebm-papst. Suction-side noise levels: LwA measured as per ISO 13347 / LpA measured with 1m distance to fan axis. The values given are valid under the measuring conditions mentioned above and may vary according to the actual installation situation. With any deviation from the standard set-up, the specific values have to be checked and reviewed with the unit installed.

Measured values

	Conn.	U	f	n	P_e	I	LpA_{in}	LwA_{in}	LwA_{out}	qv	p_{fs}
		V	Hz	min^{-1}	W	A	dB(A)	dB(A)	dB(A)	m^3/h	Pa
1	Δ	400	50	930	1796	4.30	70	77	76	32090	0
2	Δ	400	50	920	2000	4.54	69	76	75	28930	50
3	Δ	400	50	910	2203	4.77	69	76	74	25530	100
4	Δ	400	50	890	2450	5.20	72	78	77	19890	160
5	Y	400	50	795	1287	2.39	67	74	72	27090	0
6	Y	400	50	760	1392	2.59	65	72	70	23810	34
7	Y	400	50	730	1476	2.74	64	70	69	20460	64
8	Y	400	50	685	1560	2.90	65	72	70	15400	95

Conn. = Connection · U = Supply voltage · f = Frequency · n = Speed · P_e = Power input · I = Current draw · LpA_{in} = Sound pressure level inlet side · LwA_{in} = Sound power level inlet side
LwA_{out} = Sound power level outlet side · qv = Air flow · p_{fs} = Pressure increase

ebm-papst Mulfingen GmbH & Co. KG · Bachmühle 2 · D-74673 Mulfingen · Phone +49 (0) 7938 81-0 · Fax +49 (0) 7938 81-110 · info1@de.ebmpapst.com · www.ebmpapst.com