**A6E630-AE01-01**

# AC axial fan

sickled blades (S series)

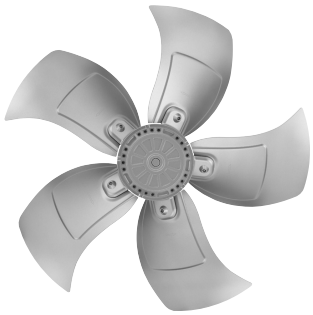

**ebm-papst Mulfingen GmbH & Co. KG**
Bachmühle 2
D-74673 Mulfingen
Phone +49 7938 81-0
Fax +49 7938 81-110
info1@de.ebmpapst.com
www.ebmpapst.com

## Nominal data

| | |
|---|---|
| **Type** | **A6E630-AE01-01** |
| **Motor** | **M6E110-GF** |

| | | |
|---|---|---|
| Phase | | 1~ |
| Nominal voltage | VAC | 230 |
| Frequency | Hz | 50 |
| Type of data definition | | ml |
| Valid for approval / standard | | CE |
| Speed | $min^{-1}$ | 880 |
| Power input | W | 610 |
| Current draw | A | 2.65 |
| Motor capacitor | µF | 14 |
| Capacitor voltage | VDB | 450 |
| Max. back pressure | Pa | 100 |
| Max. ambient temperature | °C | 60 |

ml = max. load · me = max. efficiency · rfa = running at free air · cs = customer specs · cu = customer unit
Subject to alterations

# AC axial fan

sickled blades (S series)

## Technical features

| | |
|---|---|
| **Leakage current** | <= 3.5 mA |
| **Size** | 630 mm |
| **Operation mode** | S1 |
| **Direction of rotation** | Counter-clockwise, seen on rotor |
| **Mounting position** | Any |
| **Electrical leads** | Via terminal box, integrated capacitor connected via terminal box |
| **Humidity class** | F3-1 |
| **Blade angle** | -5 |
| **Direction of air flow** | "V" |
| **Insulation class** | "F" |
| **Cable exit** | Axial |
| **Condensate discharge holes** | Rotor-side |
| **Motor bearing** | Ball bearing |
| **Mass** | 12.5 kg |
| **Material of terminal box** | ABS plastic, black |
| **Material of blades** | Aluminum sheet |
| **Motor protection** | Thermal overload protector (TOP) brought out |
| **Product conforming to standard** | CE; EN 61800-5-1 |
| **Surface of rotor** | Cast in aluminium |
| **Number of blades** | 5 |
| **Type of protection** | IP 54 |
| **Protection class** | I |
| **Max. permissible ambient motor temp. (transp./ storage)** | + 80 °C |
| **Min. permissible ambient motor temp. (transp./storage)** | - 40 °C |
| **Approval** | VDE |



ebm-papst Mulfingen GmbH & Co. KG · Bachmühle 2 · D-74673 Mulfingen · Phone +49 7938 81-0 · Fax +49 7938 81-110 · info1@de.ebmpapst.com · www.ebmpapst.com

# AC axial fan

sickled blades (S series)

## Product drawing

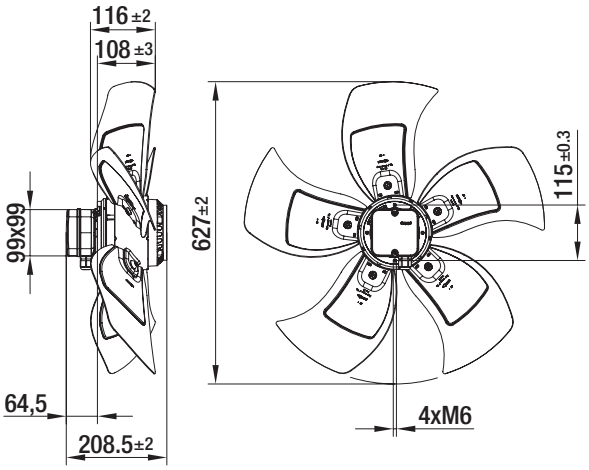




ebm-papst Mulfingen GmbH & Co. KG · Bachmühle 2 · D-74673 Mulfingen · Phone +49 7938 81-0 · Fax +49 7938 81-110 · info1@de.ebmpapst.com · www.ebmpapst.com

# AC axial fan

sickled blades (S series)

## Connection screen

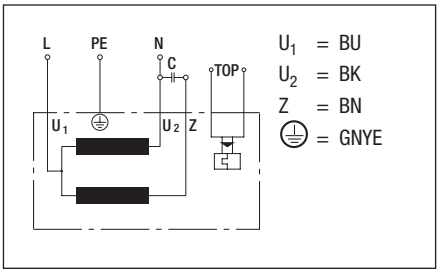




ebm-papst Mulfingen GmbH & Co. KG · Bachmühle 2 · D-74673 Mulfingen · Phone +49 7938 81-0 · Fax +49 7938 81-110 · info1@de.ebmpapst.com · www.ebmpapst.com

# AC axial fan

sickled blades (S series)

## Charts: Air flow 50 Hz

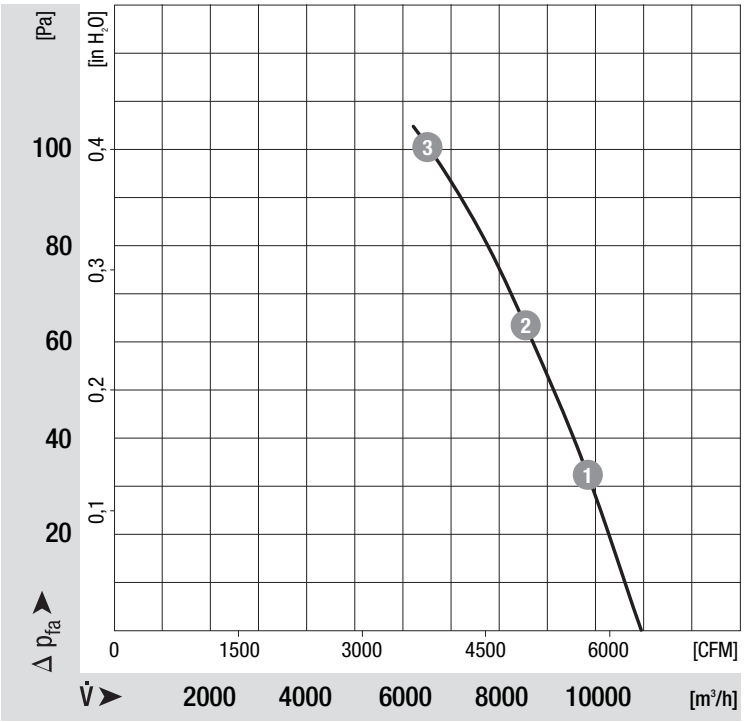


## Measured values

| | n | $P_e$ | I |
|---|---|---|---|
| | min-1 | W | A |
| 1 | 915 | 460 | 2.06 |
| 2 | 905 | 500 | 2.22 |
| 3 | 870 | 560 | 2.50 |



ebm-papst Mulfingen GmbH & Co. KG · Bachmühle 2 · D-74673 Mulfingen · Phone +49 7938 81-0 · Fax +49 7938 81-110 · info1@de.ebmpapst.com · www.ebmpapst.com