RRL140-3020LH

AC hot-air circulation blower



ebm-papst Landshut GmbH
Hofmark-Aich-Straße 25
D-84030 Landshut
Phone +49 (0) 871 707-0
Fax +49 (0) 871 707-465
info3@de.ebmpapst.com
www.ebmpapst.com

Nominal data

Type	RRL140-3020LH	
Phase		1~
Nominal voltage	VAC	230
Frequency	Hz	50
Speed	min^{-1}	1700
Power input	W	38
Air flow	m^3/h	170

ml = Max. load · me = Max. efficiency · fa = Running at free air · cs = Customer specs · cu = Customer unit
Subject to alterations

Technical features

Mass	0.80 kg
Insulation class	"H"
Mounting position	Shaft horizontal
Bearing	Porous calotte sleeve bearing with lubricant depot for max. storage temperature of 120C°
Connection line	Flat plug 6.3 x 0.8

ebm-papst Landshut GmbH · Hofmark-Aich-Straße 25 · D-84030 Landshut · Phone +49 (0) 871 707-0 · Fax +49 (0) 871 707-465 · info3@de.ebmpapst.com · www.ebmpapst.com

AC hot-air circulation blower

Product drawing

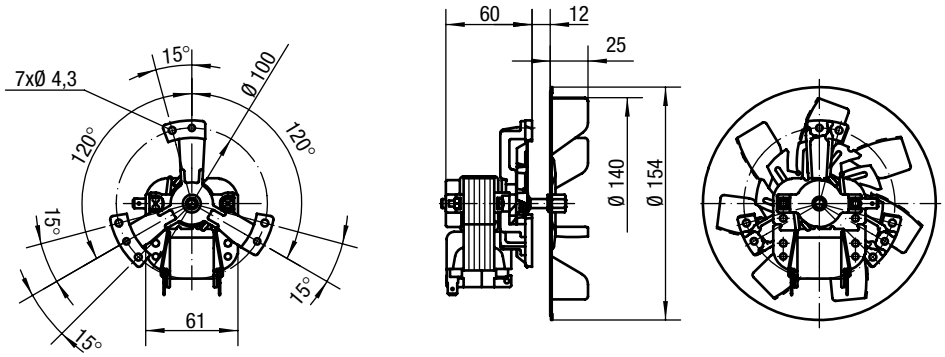

ebm-papst Landshut GmbH · Hofmark-Aich-Straße 25 · D-84030 Landshut · Phone +49 (0) 871 707-0 · Fax +49 (0) 871 707-465 · info3@de.ebmpapst.com · www.ebmpapst.com