RRL152-3030LH

AC hot-air circulation blower

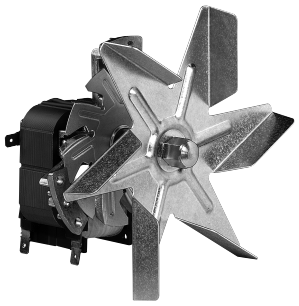

ebm-papst Landshut GmbH
Hofmark-Aich-Straße 25
D-84030 Landshut
Phone +49 (0) 871 707-0
Fax +49 (0) 871 707-465
info3@de.ebmpapst.com
www.ebmpapst.com

Nominal data

Type	RRL152-3030LH	
Phase		1~
Nominal voltage	VAC	230
Frequency	Hz	50
Speed	min^{-1}	2200
Power input	W	45
Air flow	m^3/h	200

ml = Max. load · me = Max. efficiency · fa = Running at free air · cs = Customer specs · cu = Customer unit
Subject to alterations

Technical features

Mass	1.00 kg
Insulation class	"H"
Mounting position	Any
Bearing	Ball bearings
Connection line	Flat plug 6.3 x 0.8

ebm-papst Landshut GmbH · Hofmark-Aich-Straße 25 · D-84030 Landshut · Phone +49 (0) 871 707-0 · Fax +49 (0) 871 707-465 · info3@de.ebmpapst.com · www.ebmpapst.com

AC hot-air circulation blower

Product drawing

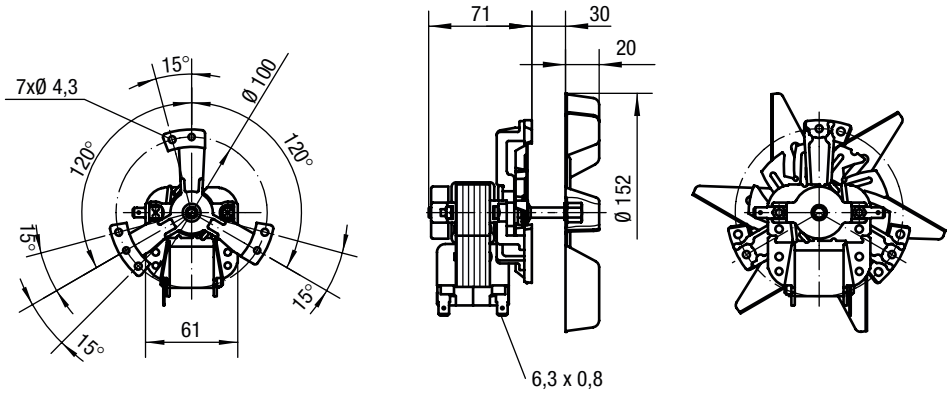

ebm-papst Landshut GmbH · Hofmark-Aich-Straße 25 · D-84030 Landshut · Phone +49 (0) 871 707-0 · Fax +49 (0) 871 707-465 · info3@de.ebmpapst.com · www.ebmpapst.com