AC 4300 H

AC axial compact fan



ebm-papst St. Georgen GmbH & Co. KG
Hermann-Papst-Str. 1
D-78112 St. Georgen
Phone +49 (0) 7724 81-0
Fax +49 (0) 7724 81-1309
info2@de.ebmpapst.com
www.ebmpapst.com

Nominal data

Type	AC 4300 H	
Phase		1~
Nominal voltage	VAC	115
Nominal voltage range	VAC	85 .. 265
Frequency	Hz	50
Speed	min-1	3400
Power input	W	12
Min. ambient temperature	°C	-20
Max. ambient temperature	°C	70
Air flow	m3/h	204
Sound power level	B	6.4
Sound pressure level	dB(A)	51

ml = Max. load · me = Max. efficiency · fa = Running at free air · cs = Customer specs · cu = Customer unit
Subject to alterations

Technical features

General description	Universally usable for all mains voltages between 85 and 265 VAC
Housing material	Glasfaserverstärkter Kunststoff (PBTP)
Mass	0.325 kg
Dimensions	119 x 119 x 32 mm
Material of impeller	Fibreglass-reinforced plastic (PA)
Direction of air flow	Exhaust over struts
Direction of rotation	Right, looking at rotor
Type of protection	IP 21
Bearing	Ball bearings
Lifetime L10 at 40 °C	45000 h
Lifetime L10 at maximum temperature	22500 h
Connection line	With single strands AWG 22, TR 64
Motor protection	Protected against reverse polarity and locking.
Approval	UL, CSA, VDE

ebm-papst St. Georgen GmbH & Co. KG · Hermann-Papst-Str. 1 · D-78112 St. Georgen · Phone +49 (0) 7724 81-0 · Fax +49 (0) 7724 81-1309 · info2@de.ebmpapst.com · www.ebmpapst.com

AC axial compact fan

Product drawing

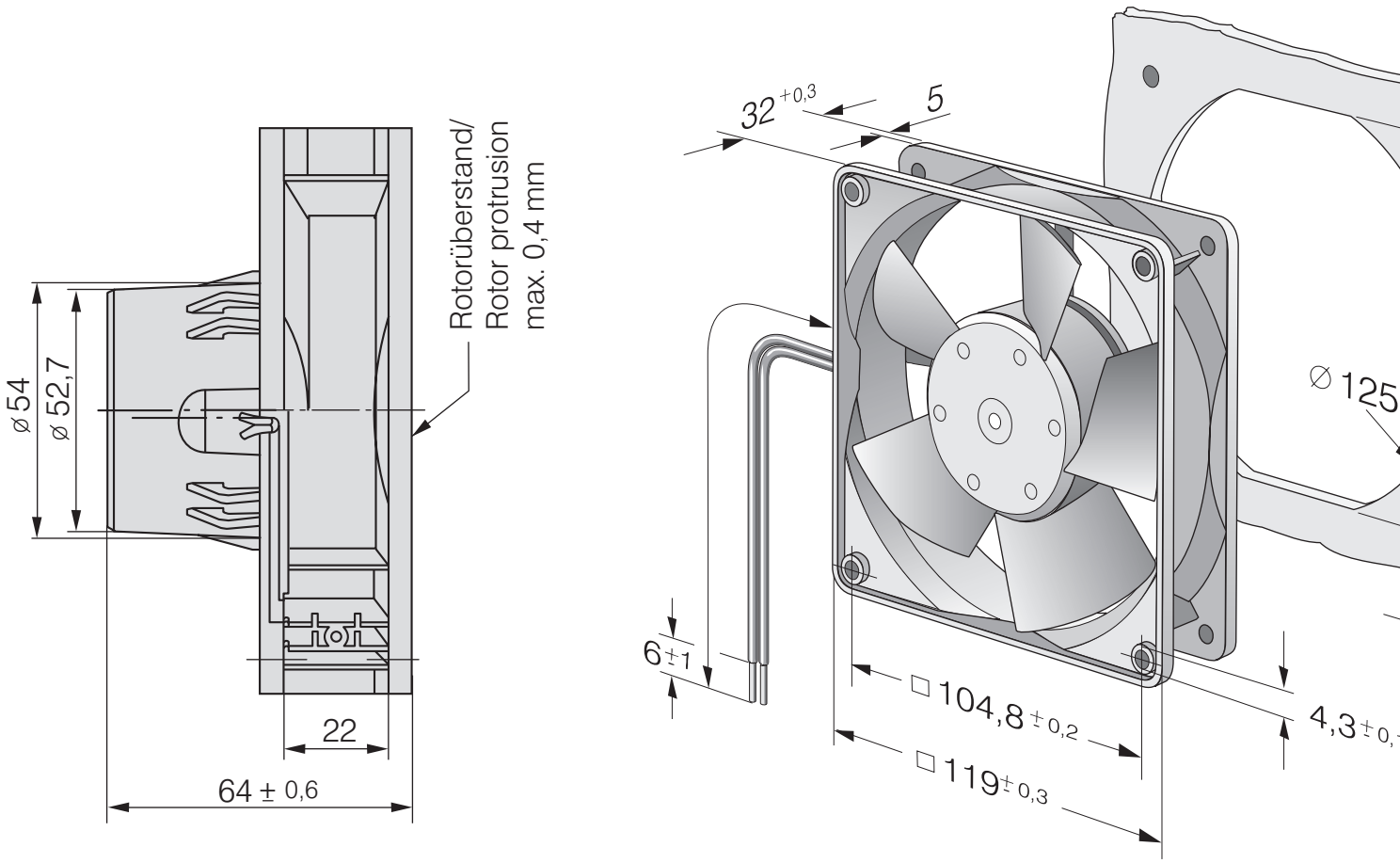

ebm-papst St. Georgen GmbH & Co. KG · Hermann-Papst-Str. 1 · D-78112 St. Georgen · Phone +49 (0) 7724 81-0 · Fax +49 (0) 7724 81-1309 · info2@de.ebmpapst.com · www.ebmpapst.com

AC axial compact fan

Charts: Air flow

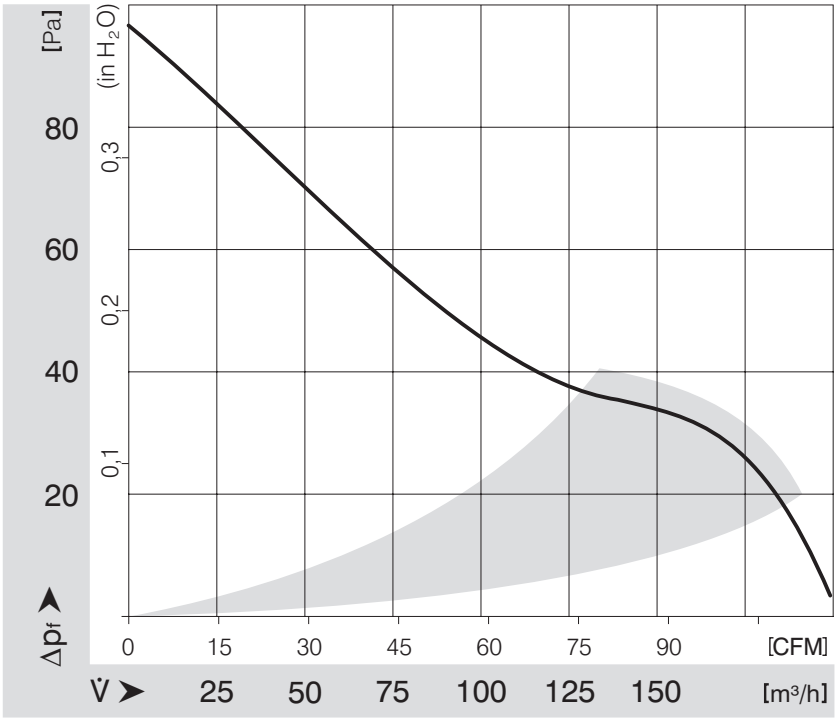

ebm-papst St. Georgen GmbH & Co. KG · Hermann-Papst-Str. 1 · D-78112 St. Georgen · Phone +49 (0) 7724 81-0 · Fax +49 (0) 7724 81-1309 · info2@de.ebmpapst.com · www.ebmpapst.com