D1G133-AB39-52

EC centrifugal fan

forward curved, dual inlet

with housing (without flange)



ebm-papst Mulfingen GmbH & Co. KG
Bachmühle 2 · D-74673 Mulfingen
Phone +49 7938 81-0
Fax +49 7938 81-110
info1@de.ebmpapst.com
www.ebmpapst.com

Limited partnership · Headquarters Mulfingen
County court Stuttgart · HRA 590344

General partner Elektrobau Mulfingen GmbH · Headquarters Mulfingen
County court Stuttgart · HRB 590142

Nominal data

Type	**D1G133-AB39-52**	
Motor	**M1G074-BF**	
Nominal voltage	VDC	48
Nominal voltage range	VDC	36 .. 57
Frequency	Hz	-
Type of data definition		fa
Speed	min^{-1}	1780
Power input	W	105
Current draw	A	2.8
Min. ambient temperature	°C	-25
Max. ambient temperature	°C	60

ml = Max. load · me = Max. efficiency · fa = Running at free air · cs = Customer specs · cu = Customer unit
Subject to alterations

EC centrifugal fan

forward curved, dual inlet

with housing (without flange)

Technical features

Mass	2.8 kg
Size	133 mm
Surface of rotor	Coated in black
Material of impeller	Sheet steel, galvanised
Housing material	Sheet steel, galvanised
Motor suspension	Motor mounted anti-vibration on both sides
Direction of rotation	Clockwise, seen on rotor
Type of protection	IP 42
Insulation class	"B"
Humidity class	F0
Max. permissible ambient motor temp. (transp./ storage)	+80 °C
Min. permissible ambient motor temp. (transp./storage)	-40 °C
Mounting position	Any
Condensate discharge holes	None
Operation mode	S1
Motor bearing	Ball bearing
Technical features	- Tach output - Motor current limit - Soft start - Control input 0-10 VDC / PWM
EMC interference immunity	Acc. to EN 61000-6-2 (industrial environment)
EMC interference emission	Acc. to EN 55022 (Class B, household environment)
Motor protection	Reverse polarity and locked-rotor protection
Cable exit	Variable
Product conforming to standard	EN 60950-1
Approval	UL 1004-1; CCC; EAC; CSA C22.2 Nr.77

ebm-papst Mulfingen GmbH & Co. KG · Bachmühle 2 · D-74673 Mulfingen · Phone +49 (0) 7938 81-0 · Fax +49 (0) 7938 81-110 · info1@de.ebmpapst.com · www.ebmpapst.com

EC centrifugal fan

forward curved, dual inlet

with housing (without flange)

Product drawing

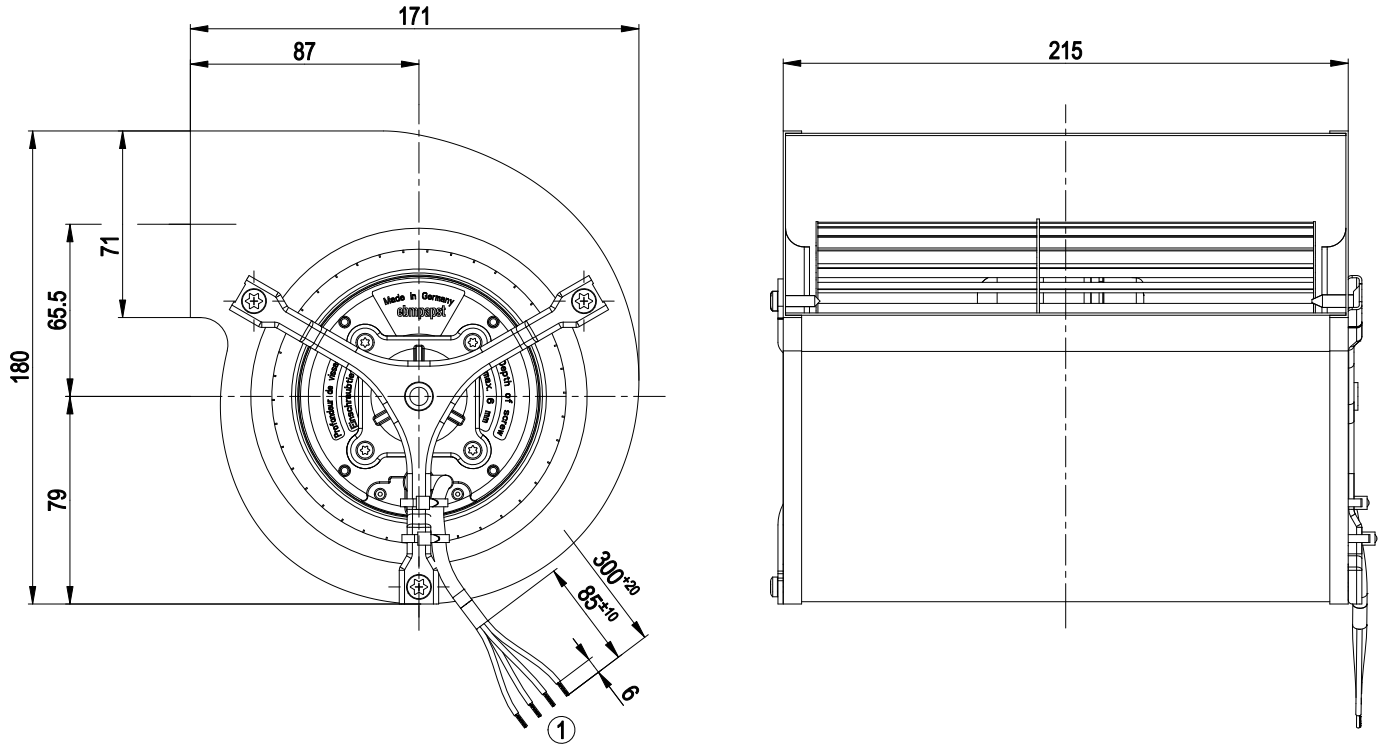

1	Connection line PVC AWG20, 4x brass lead tips crimped

ebm-papst Mulfingen GmbH & Co. KG · Bachmühle 2 · D-74673 Mulfingen · Phone +49 (0) 7938 81-0 · Fax +49 (0) 7938 81-110 · info1@de.ebmpapst.com · www.ebmpapst.com

EC centrifugal fan

forward curved, dual inlet

with housing (without flange)

Connection screen

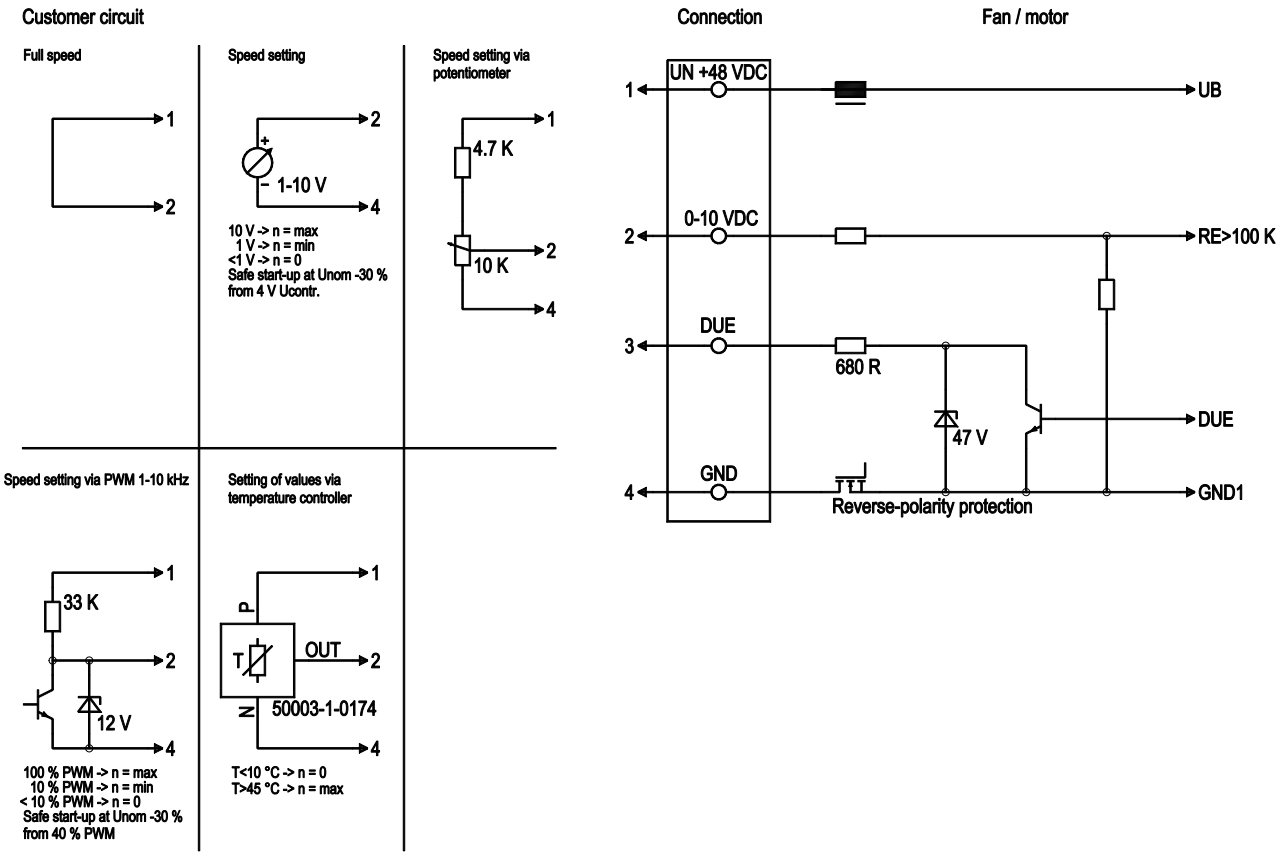

No.	Conn.	Designation	Colour	Function / assignment
1	1	Un +48 VDC	red	Power supply 48 VDC, residual ripple 3.5 %
1	2	0-10 VDC	yellow	Control input Re > 100 K
1	3	Tach	white	Speed monitoring output, 3 pulses per rotation, Isink max = 10 mA
1	4	GND	blue	Reference mass

ebm-papst Mulfingen GmbH & Co. KG · Bachmühle 2 · D-74673 Mulfingen · Phone +49 (0) 7938 81-0 · Fax +49 (0) 7938 81-110 · info1@de.ebmpapst.com · www.ebmpapst.com

EC centrifugal fan

forward curved, dual inlet

with housing (without flange)

Charts: Air flow

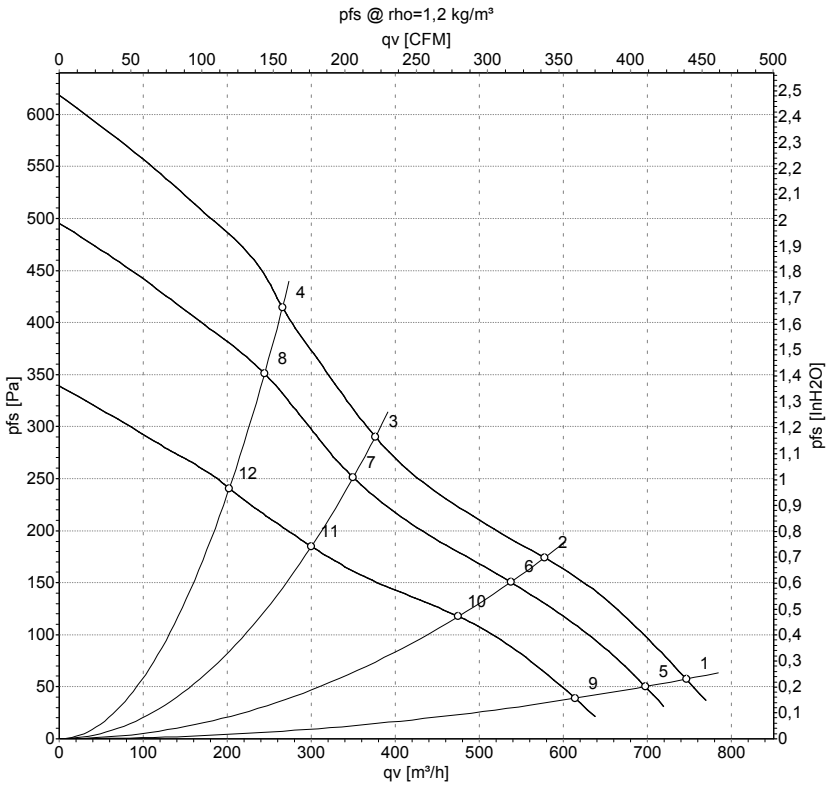

Measurement: LU-51633
Measurement: LU-51632
Measurement: LU-51634

Air performance measured as per ISO 5801 Installation category A. For detailed information on the measuring set-up, please contact ebm-papst. Suction-side noise levels: LwA measured as per ISO 13347 / LpA measured with 1m distance to fan axis. The values given are valid under the measuring conditions mentioned above and may vary according to the actual installation situation. With any deviation from the standard set-up, the specific values have to be checked and reviewed with the unit installed.

Measured values

	U	n	P_{ed}	I	qv	p_{fs}
	V	min^{-1}	W	A	m^3/h	Pa
1	57	1890	130	3.24	745	58
2	57	2230	114	2.64	575	174
3	57	2640	104	2.21	375	290
4	57	3005	98	1.98	265	412
5	48	1780	105	2.80	695	50
6	48	2065	92	2.37	535	150
7	48	2455	85	2.03	350	250
8	48	2775	76	1.77	245	350
9	36	1590	70	2.31	615	40
10	36	1855	64	2.02	475	118
11	36	2120	54	1.67	300	185
12	36	2325	45	1.40	200	241

U = Supply voltage · n = Speed · P_{ed} = Power input · I = Current draw · qv = Air flow · p_{fs} = Pressure increase

ebm-papst Mulfingen GmbH & Co. KG · Bachmühle 2 · D-74673 Mulfingen · Phone +49 (0) 7938 81-0 · Fax +49 (0) 7938 81-110 · info1@de.ebmpapst.com · www.ebmpapst.com