D2E146-AP47-75

AC centrifugal fan

forward-curved, dual-intake

with housing (flange)



ebm-papst Mulfingen GmbH & Co. KG
Bachmühle 2 · D-74673 Mulfingen
Phone +49 7938 81-0
Fax +49 7938 81-110
info1@de.ebmpapst.com
www.ebmpapst.com

Limited partnership · Headquarters Mulfingen
Amtsgericht (court of registration) Stuttgart · HRA 590344

General partner Elektrobau Mulfingen GmbH · Headquarters Mulfingen
Amtsgericht (court of registration) Stuttgart · HRB 590142

Nominal data

Type	**D2E146-AP47-75**
Motor	**M2E068-EC**

Phase		1~	1~
Nominal voltage	VAC	230	230
Frequency	Hz	50	60
Method of obtaining data		ml	ml
Valid for approval/standard		-	-
Speed (rpm)	min^{-1}	2050	2550
Power consumption	W	300	330
Current draw	A	1.31	1.45
Capacitor	µF	8	8
Capacitor voltage	VDB	400	400
Capacitor standard		S2 (CE)	S2 (CE)
Min. back pressure	Pa	200	400
Min. back pressure	in. wg	0.8	1.61
Min. ambient temperature	°C	-25	-25
Max. ambient temperature	°C	30	25

ml = Max. load · me = Max. efficiency · fa = Free air · cs = Customer specification · ce = Customer equipment
Subject to change

AC centrifugal fan

forward-curved, dual-intake

with housing (flange)

Technical description

Weight	4.9 kg
Size	146 mm
Motor size	68
Rotor surface	Unpainted
Impeller material	Sheet steel, galvanized
Housing material	Sheet steel, galvanized
Motor suspension	Motor mounted with brackets on one side
Direction of rotation	Counterclockwise, viewed toward rotor
Degree of protection	IP44; installation- and position-dependent
Insulation class	"B"
Moisture (F) / Environmental (H) protection class	H0 - dry environment
Max. permitted ambient temp. for motor (transport/storage)	+ 80 °C
Min. permitted ambient temp. for motor (transport/storage)	- 40 °C
Installation position	Any
Condensation drainage holes	None
Mode	S1
Motor mounting	Ball bearing
Touch current according to IEC 60990 (measuring circuit Fig. 4, TN system)	< 0.75 mA
Electrical hookup	Via terminals, capacitor connected
Motor protection	Thermal overload protector (TOP) internally connected
With cable	Variable
Protection class	I (with customer connection of protective earth)
Motor capacitor according to EN 60252-1 in safety protection class	S2
Conformity with standards	EN 60335-1

ebm-papst Mulfingen GmbH & Co. KG · Bachmühle 2 · D-74673 Mulfingen · Phone +49 (0) 7938 81-0 · Fax +49 (0) 7938 81-110 · info1@de.ebmpapst.com · www.ebmpapst.com

AC centrifugal fan

forward-curved, dual-intake

with housing (flange)

Product drawing

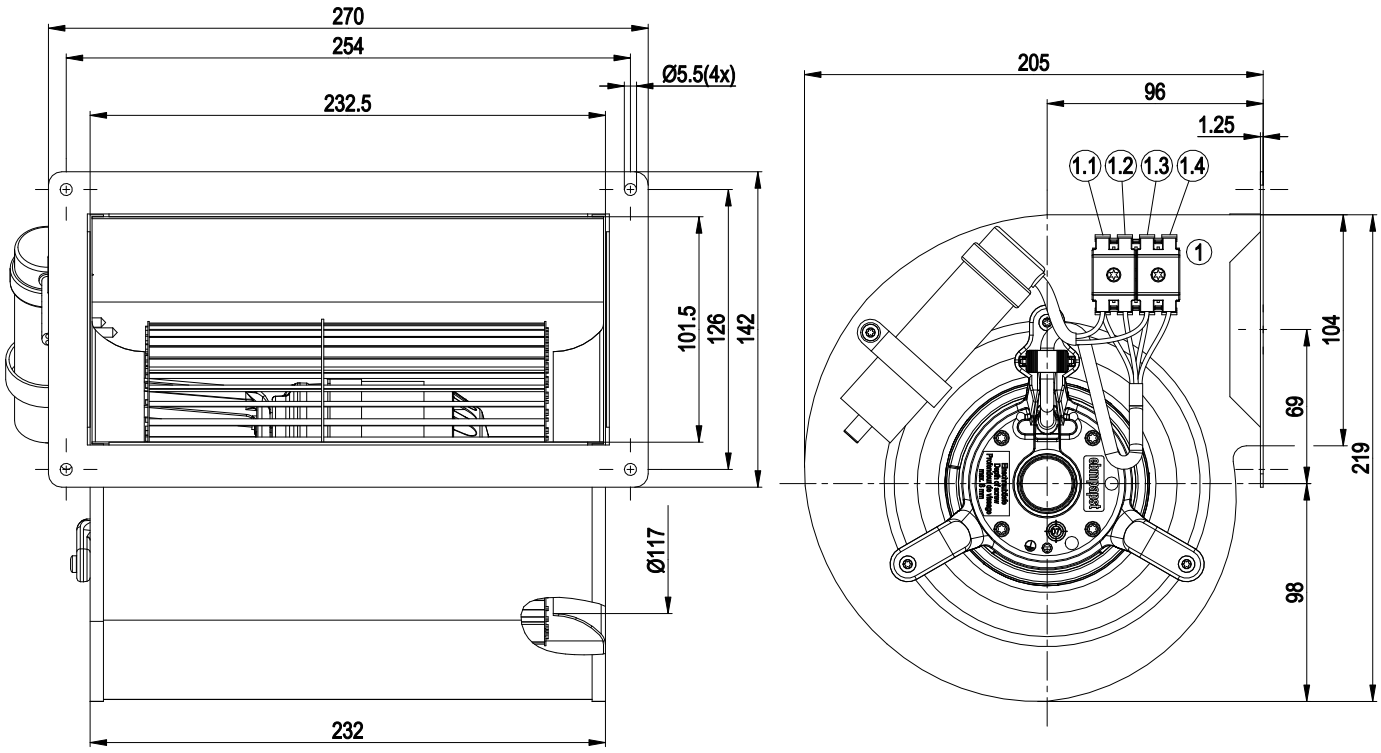

1	Cable PVC 4G 0.5 mm²	1.1	brown	1.2	blue
1.3	black	1.4	green/yellow		

Connection diagram

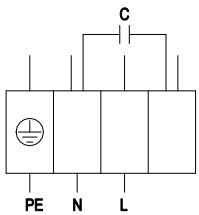

PE	green/yellow	N	black	L	blue

ebm-papst Mulfingen GmbH & Co. KG · Bachmühle 2 · D-74673 Mulfingen · Phone +49 (0) 7938 81-0 · Fax +49 (0) 7938 81-110 · info1@de.ebmpapst.com · www.ebmpapst.com

AC centrifugal fan

forward-curved, dual-intake

with housing (flange)

Curves: Air performance 50 Hz Y

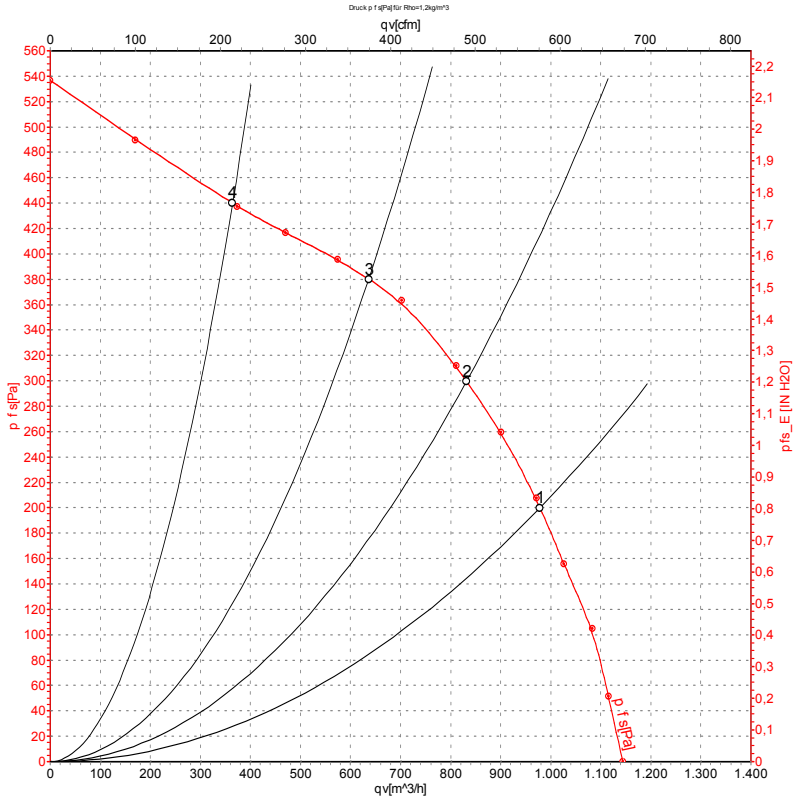

Measurement: LU-32744-1

Air performance measured according to ISO 5801 installation category A. For detailed information on the measurement setup, contact ebm-papst. Intake sound level: Sound power level according to ISO 13347 / sound pressure level measured at 1 m distance from fan axis. The values given are valid under the specified measuring conditions and may vary due to conditions of installation. For deviations from the standard configuration, the parameters have to be checked on the installed unit.

Measured values

	Wired	U	f	n	P_e	I	q_V	p_{fs}	q_V	p_{fs}
		V	Hz	min^{-1}	W	A	m^3/h	Pa	cfm	in. wg
1	Y	230	50	2050	300	1.31	970	200	570	0.80
2	Y	230	50	2265	267	1.18	830	300	490	1.20
3	Y	230	50	2490	232	1.02	635	380	375	1.53
4	Y	230	50	2675	191	0.84	365	440	215	1.77

Wired = Wiring · U = Power supply · f = Frequency · n = Speed (rpm) · P_e = Power consumption · I = Current draw · q_V = Air flow · p_{fs} = Pressure increase

ebm-papst Mulfingen GmbH & Co. KG · Bachmühle 2 · D-74673 Mulfingen · Phone +49 (0) 7938 81-0 · Fax +49 (0) 7938 81-110 · info1@de.ebmpapst.com · www.ebmpapst.com

AC centrifugal fan

forward-curved, dual-intake

with housing (flange)

Curves: Air performance 60 Hz Y

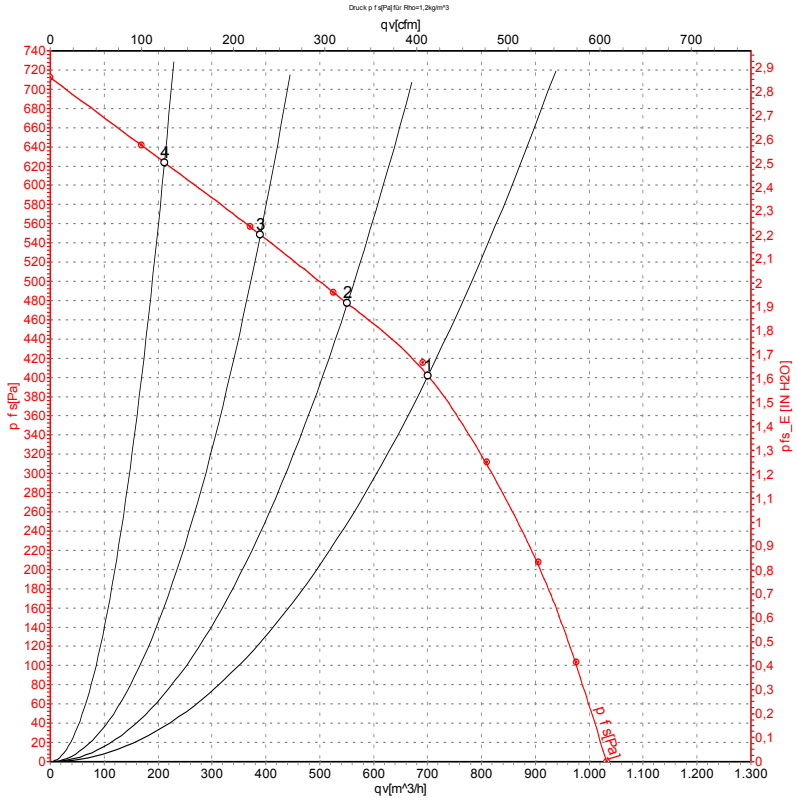

Measurement: LU-32745-1

Air performance measured according to ISO 5801 installation category A. For detailed information on the measurement setup, contact ebm-papst. Intake sound level: Sound power level according to ISO 13347 / sound pressure level measured at 1 m distance from fan axis. The values given are valid under the specified measuring conditions and may vary due to conditions of installation. For deviations from the standard configuration, the parameters have to be checked on the installed unit.

Measured values

	Wired	U	f	n	P_e	I	q_V	p_{fs}	q_V	p_{fs}
		V	Hz	min^{-1}	W	A	m^3/h	Pa	cfm	in. wg
1	Y	230	60	2550	330	1.45	700	400	410	1.61
2	Y	230	60	2770	300	1.36	550	475	325	1.91
3	Y	230	60	2975	277	1.28	390	550	230	2.21
4	Y	230	60	3095	260	1.22	210	625	125	2.51

Wired = Wiring · U = Power supply · f = Frequency · n = Speed (rpm) · P_e = Power consumption · I = Current draw · q_V = Air flow · p_{fs} = Pressure increase

ebm-papst Mulfingen GmbH & Co. KG · Bachmühle 2 · D-74673 Mulfingen · Phone +49 (0) 7938 81-0 · Fax +49 (0) 7938 81-110 · info1@de.ebmpapst.com · www.ebmpapst.com