A3G250-AC54-10

EC axial fan

sickled blades (S series)



ebm-papst Mulfingen GmbH & Co. KG
Bachmühle 2 · D-74673 Mulfingen
Phone +49 7938 81-0
Fax +49 7938 81-110
info1@de.ebmpapst.com
www.ebmpapst.com

Limited partnership · Headquarters Mulfingen
County court Stuttgart · HRA 590344

General partner Elektrobau Mulfingen GmbH · Headquarters Mulfingen
County court Stuttgart · HRB 590142

ErP2015 EXCEEDS THE NORM

Nominal data

Type	**A3G250-AC54-10**	
Motor	**M3G074-CF**	
Phase		1~
Nominal voltage	VAC	230
Nominal voltage range	VAC	200 .. 277
Frequency	Hz	50/60
Type of data definition		fa
Speed	min^{-1}	3050
Power input	W	170
Current draw	A	1.25
Min. ambient temperature	°C	-25
Max. ambient temperature	°C	60

ml = max. load · me = max. efficiency · fa = running at free air · cs = customer specs · cu = customer unit
Subject to alterations

Data according to ErP directive

Installation category	A
Efficiency category	Static
Variable speed drive	Yes
Specific ratio*	1.00

* Specific ratio = 1 + p_{fs} / 100 000 Pa

		Actual	Request 2013	Request 2015
Overall efficiency η_{es}		43.3	24.8	28.8
Efficiency grade N		54.5	36	40
Power input P_{ed}	kW	0.17		
Air flow q_v	m^3/h	1355		
Pressure increase p_{fs}	Pa	176		
Speed n	min^{-1}	2875		

Data established at point of optimum efficiency

ebmpapst

EC axial fan

sickled blades (S series)

Technical features

Mass	2.2 kg
Size	250 mm
Surface of rotor	Coated in black
Material of electronics housing	Die-cast aluminium
Material of blades	Sheet steel, coated in black
Number of blades	7
Direction of rotation	"V"
Type of protection	IP 44
Insulation class	"B"
Humidity class	F3-1
Max. permissible ambient motor temp. (transp./ storage)	+ 80 °C
Min. permissible ambient motor temp. (transp./storage)	- 40 °C
Mounting position	Shaft horizontal or rotor on bottom; rotor on top on request
Condensate discharge holes	Rotor-side
Operation mode	S1
Motor bearing	Ball bearing
Technical features	- Control input 0-10 VDC / PWM - Output 10 VDC, max. 1.1 mA - Tach output - Over-temperature protected electronics / motor - Motor current limit - Soft start
Touch current acc. IEC 60990 (measuring network Fig. 4, TN system)	<= 0.25 mA
Motor protection	Thermal overload protector (TOP) wired internally
Cable exit	Variable
Protection class	I (if protective earth is connected by customer)
Product conforming to standard	EN 60335-1
Approval	VDE; CCC; UL 2111; CSA C22.2 Nr.77

ebm-papst Mulfingen GmbH & Co. KG · Bachmühle 2 · D-74673 Mulfingen · Phone +49 (0) 7938 81-0 · Fax +49 (0) 7938 81-110 · info1@de.ebmpapst.com · www.ebmpapst.com

EC axial fan

sickled blades (S series)

Product drawing

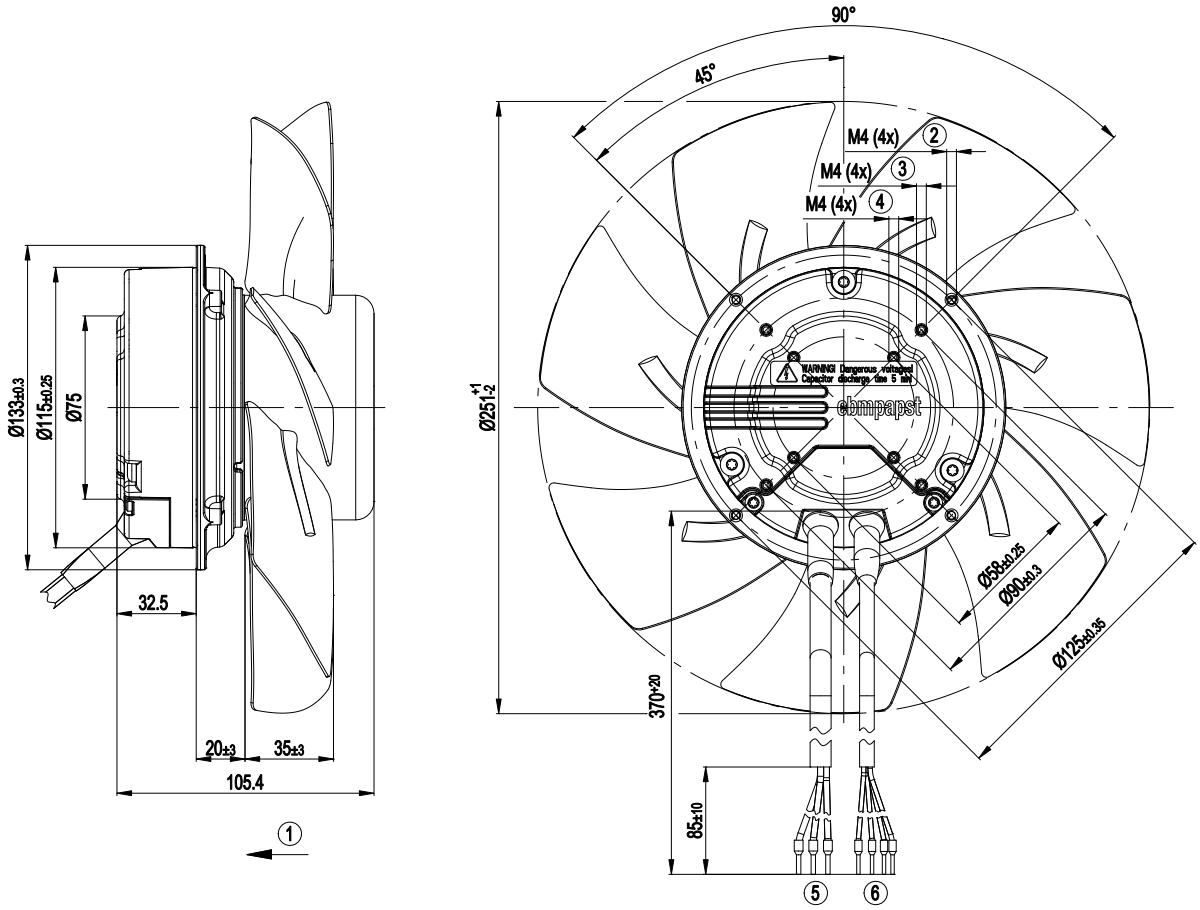

1	Direction of air flow "V"
2	Depth of screw 8 - 10 mm
3	Pilot hole prepared for self-tapping screw M4, depth of screw max. 6 mm
4	Pilot hole prepared for self-tapping screw M4, depth of screw max. 8 mm
5	Connection line AWG 18, 3 x crimped core-end sleeve - UL/cUL style 2517/1569 Ø1.9 ..... 2.3
6	Connection line AWG 22, 4 x crimped core-end sleeve - UL/cUL style 2464/1061 Ø1.2 ..... 1.35

ebm-papst Mulfingen GmbH & Co. KG · Bachmühle 2 · D-74673 Mulfingen · Phone +49 (0) 7938 81-0 · Fax +49 (0) 7938 81-110 · info1@de.ebmpapst.com · www.ebmpapst.com

EC axial fan

sickled blades (S series)

Connection screen

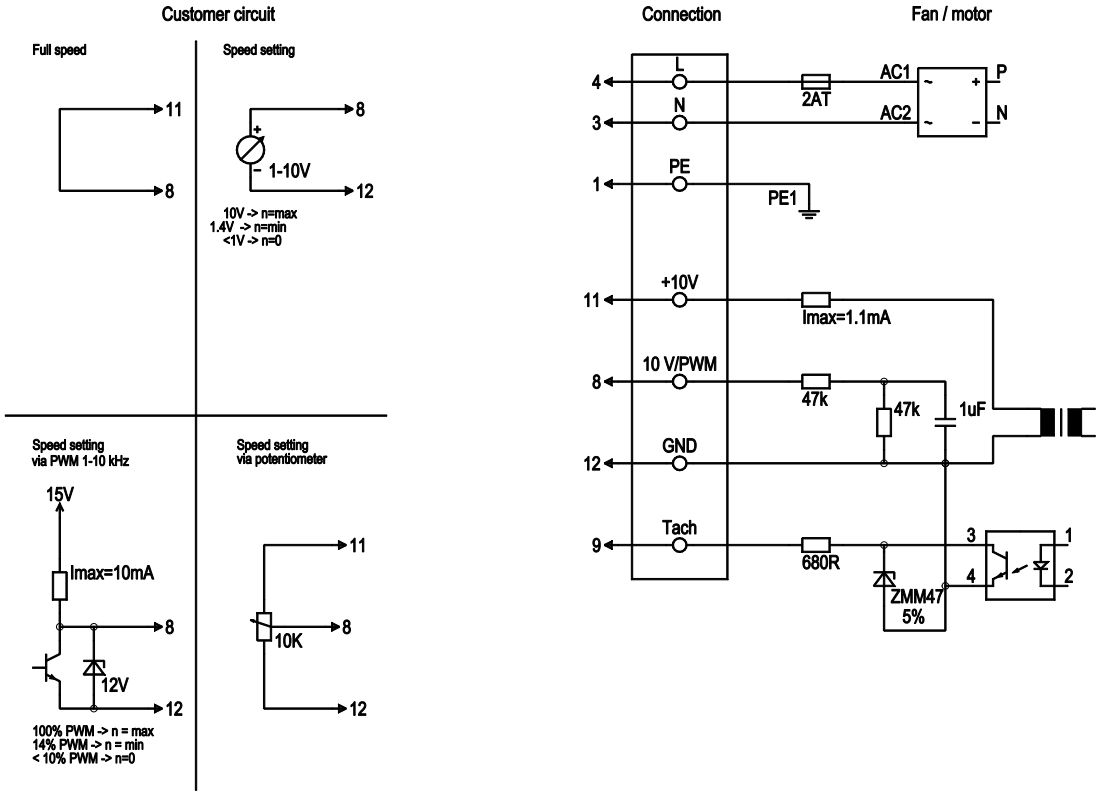

Line	No.	Signal	Colour	Function / assignment
	4	L	black	Power supply 230 VAC, 50-60 Hz, see type plate for voltage range
	3	N	blue	Neutral conductor
	1	PE	green/yellow	Protective earth
	8	0-10 V PWM	yellow	Control input 0 - 10 V or PWM, electrically isolated
	9	Tach	white	Tach output: open collector, 1 pulse per revolution, electrically isolated
	11	10V / max. 1.1 mA	red	Voltage output 10 V / max. 1.1 mA, electrically isolated
	12	GND	blue	GND - Connection for control interface

ebm-papst Mulfingen GmbH & Co. KG · Bachmühle 2 · D-74673 Mulfingen · Phone +49 (0) 7938 81-0 · Fax +49 (0) 7938 81-110 · info1@de.ebmpapst.com · www.ebmpapst.com

EC axial fan

sickled blades (S series)

Charts: Air flow 50 Hz

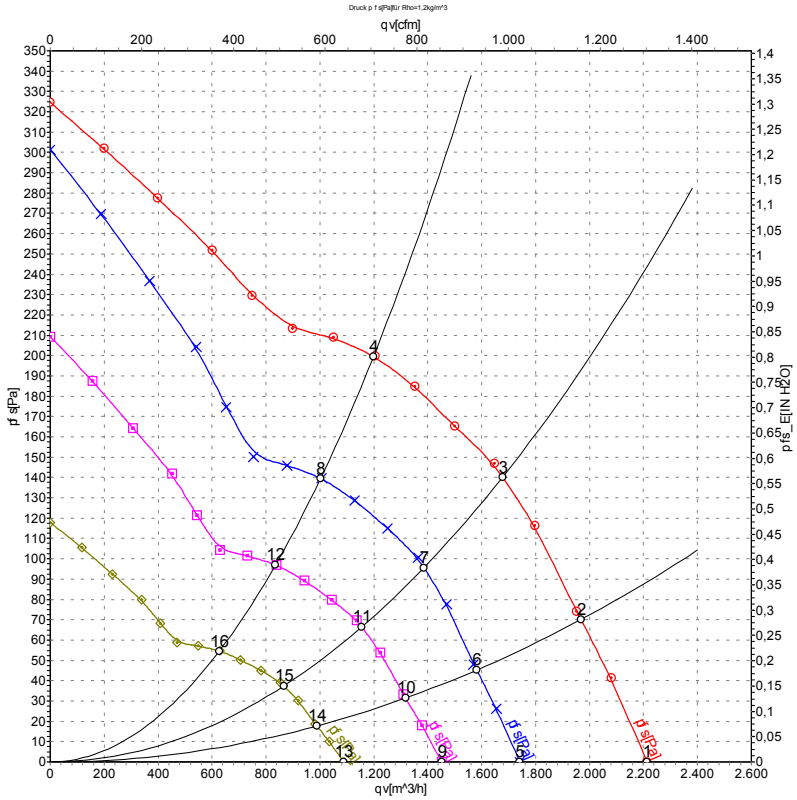

Measurement: LU-127645

Air performance measured as per ISO 5801 Installation category A. For detailed information on the measuring set-up, please contact ebm-papst. Suction-side noise levels: LwA measured as per ISO 13347 / LpA measured with 1m distance to fan axis. The values given are valid under the measuring conditions mentioned above and may vary according to the actual installation situation. With any deviation from the standard set-up, the specific values have to be checked and reviewed with the unit installed.

Measured values

	U	f	n	P_{ed}	I	LpA_{in}	LwA_{in}	qv	p_{fs}
	V	Hz	min^{-1}	W	A	dB(A)	dB(A)	m^3/h	Pa
1	230	50	3050	170	1.25	72	78	2215	0
2	230	50	2985	170	1.37	73	80	1970	70
3	230	50	2905	170	1.38	74	81	1680	140
4	230	50	2870	170	1.37	74	82	1200	200
5	230	50	2400	82	0.65	66	73	1740	0
6	230	50	2400	91	0.71	68	75	1580	45
7	230	50	2400	99	0.78	70	77	1385	96
8	230	50	2400	101	0.80	71	78	1005	140
9	230	50	2000	47	0.38	62	69	1450	0
10	230	50	2000	52	0.41	64	71	1320	31
11	230	50	2000	57	0.45	66	73	1155	67
12	230	50	2000	58	0.47	67	74	835	97
13	230	50	1500	20	0.16	56	63	1090	0
14	230	50	1500	22	0.17	58	65	990	18
15	230	50	1500	24	0.19	59	67	865	38
16	230	50	1500	25	0.20	60	68	625	55

U = Supply voltage · f = Frequency · n = Speed · P_{ed} = Power input · I = Current draw · LpA_{in} = Sound pressure level inlet side · LwA_{in} = Sound power level inlet side · qv = Air flow
p_{fs} = Pressure increase

ebm-papst Mulfingen GmbH & Co. KG · Bachmühle 2 · D-74673 Mulfingen · Phone +49 (0) 7938 81-0 · Fax +49 (0) 7938 81-110 · info1@de.ebmpapst.com · www.ebmpapst.com