A3G910-AI02-03

EC axial fan

sickled blades (S series)

ebm-papst Mulfingen GmbH & Co. KG
Bachmühle 2 · D-74673 Mulfingen
Phone +49 7938 81-0
Fax +49 7938 81-110
info1@de.ebmpapst.com
www.ebmpapst.com

Limited partnership · Headquarters Mulfingen
County court Stuttgart · HRA 590344

General partner Elektrobau Mulfingen GmbH · Headquarters Mulfingen
County court Stuttgart · HRB 590142

ErP2015 EXCEEDS THE NORM

Nominal data

Type	**A3G910-AI02-03**
Motor	**M3G150-NA**

Phase		3~
Nominal voltage	VAC	400
Nominal voltage range	VAC	380 .. 480
Frequency	Hz	50/60
Type of data definition		ml
Speed	min^{-1}	980
Power input	W	2800
Current draw	A	4.3
Max. back pressure	Pa	220
Min. ambient temperature	°C	-25
Max. ambient temperature	°C	60

ml = max. load · me = max. efficiency · fa = running at free air · cs = customer specs · cu = customer unit
Subject to alterations

Data according to ErP directive

Installation category	A
Efficiency category	Static
Variable speed drive	Yes
Specific ratio*	1.00

* Specific ratio = 1 + p_{fs} / 100 000 Pa

		Actual	Request 2013	Request 2015
Overall efficiency η_{es}		47.4	32.3	36.3
Efficiency grade N		51.1	36	40
Power input P_{ed}	kW	2.59		
Air flow q_v	m^3/h	24045		
Pressure increase p_{fs}	Pa	175		
Speed n	min^{-1}	990		

Data established at point of optimum efficiency

EC axial fan

sickled blades (S series)

Technical features

Mass	33 kg
Size	910 mm
Surface of rotor	Coated in black
Material of electronics housing	Die-cast aluminium
Material of blades	Die-cast aluminium
Number of blades	5
Blade angle	0°
Direction of air flow	"V"
Direction of rotation	Clockwise, seen on rotor
Type of protection	IP 54
Insulation class	"F"
Humidity class	F4-1
Max. permissible ambient motor temp. (transp./ storage)	+80 °C
Min. permissible ambient motor temp. (transp./storage)	-40 °C
Mounting position	Shaft horizontal or rotor on bottom; rotor on top on request
Condensate discharge holes	Rotor-side
Operation mode	S1
Motor bearing	Ball bearing
Technical features	- PFC, passive - Control input 0-10 VDC / PWM - Over-temperature protected electronics / motor - Alarm relay - Integrated PID controller - Input for sensor 0-10 V or 4-20 mA - Output for slave 0-10 V - RS485 ebmBUS - Motor current limit - Soft start - Line undervoltage / phase failure detection - Output 10 VDC, max. 10 mA - Output 20 VDC, max. 50 mA
EMC interference immunity	Acc. to EN 61000-6-2 (industrial environment)
EMC interference emission	Acc. to EN 61000-6-3 (household environment)
Touch current acc. IEC 60990 (measuring network Fig. 4, TN system)	<= 3.5 mA
Electrical leads	Via terminal box
Motor protection	Reverse polarity and locked-rotor protection
Protection class	I (if protective earth is connected by customer)
Product conforming to standard	EN 61800-5-1; CE
Approval	CSA; GOST; VDE; UL 2111

ebm-papst Mulfingen GmbH & Co. KG · Bachmühle 2 · D-74673 Mulfingen · Phone +49 (0) 7938 81-0 · Fax +49 (0) 7938 81-110 · info1@de.ebmpapst.com · www.ebmpapst.com

EC axial fan

sickled blades (S series)

Product drawing

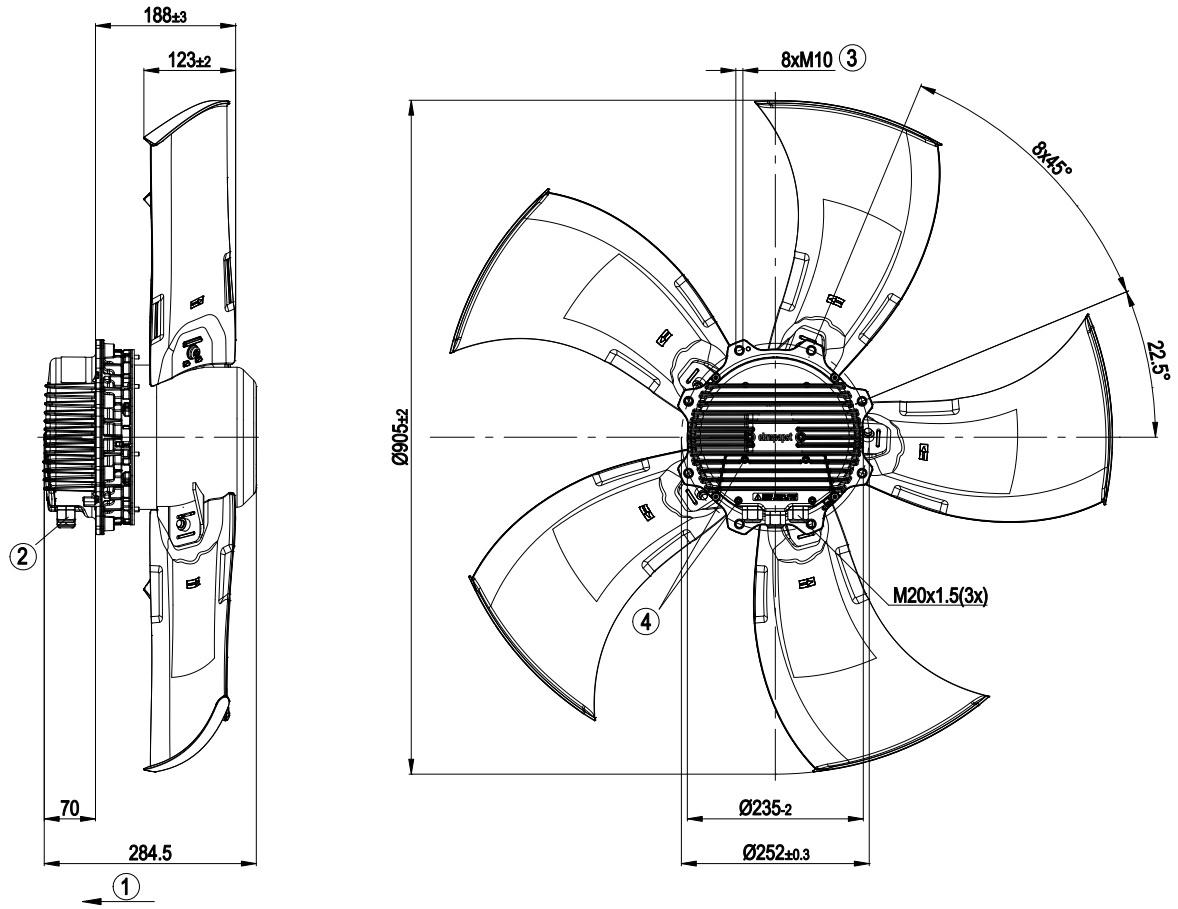

1	Direction of air flow "V"
2	Cable diameter: min. 4 mm, max. 10 mm, tightening torque: 4±0.6 Nm
3	Depth of screw max. 25 mm
4	Tightening torque 3.5±0.5 Nm

ebm-papst Mulfingen GmbH & Co. KG · Bachmühle 2 · D-74673 Mulfingen · Phone +49 (0) 7938 81-0 · Fax +49 (0) 7938 81-110 · info1@de.ebmpapst.com · www.ebmpapst.com

EC axial fan

sickled blades (S series)

Connection screen

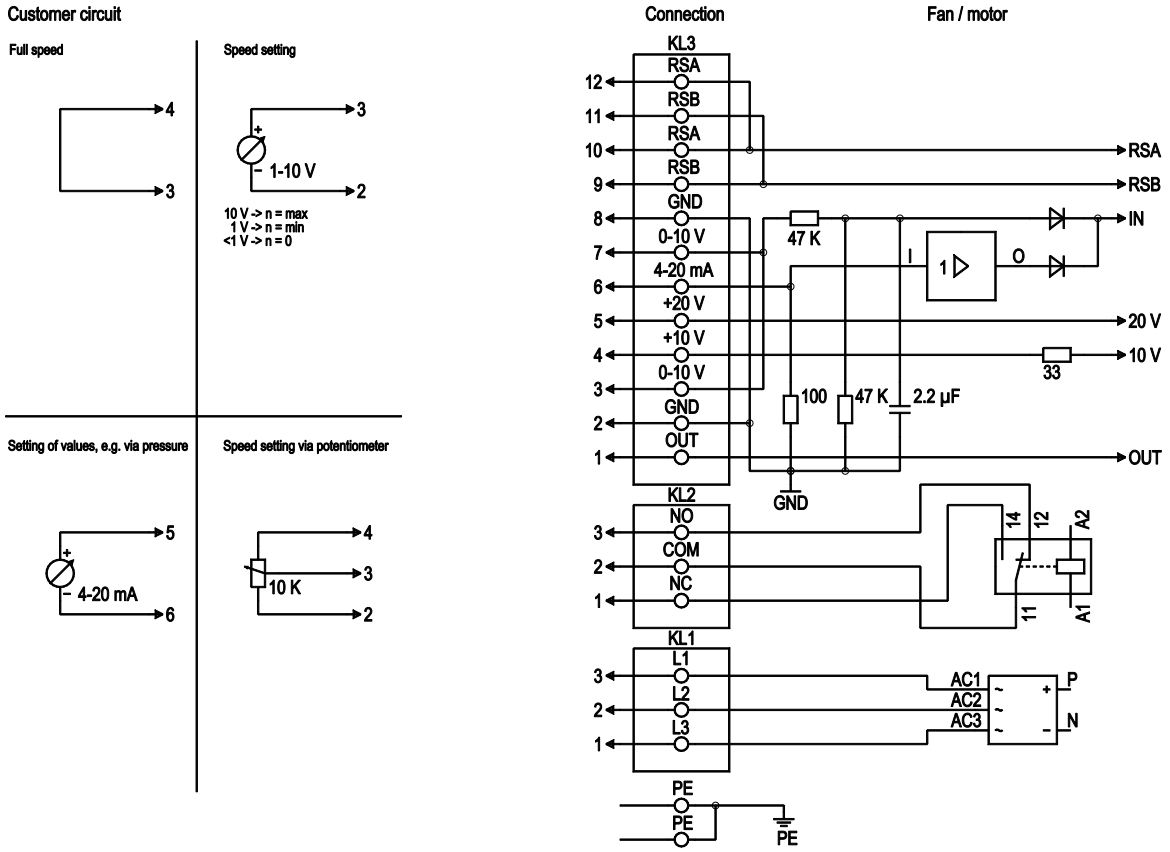

No.	Pin	Signal	Function / assignment
PE		PE	Protective earth connection
KL1	1, 2, 3	L1, L2, L3	Supply voltage, 50/60 Hz
KL2	1	NC	Floating status message contact, normally closed connection
KL2	2	COM	Floating status message contact, changeover contact, common connection (2 A, max. 250 VAC, min. 10 mA, AC1)
KL2	3	NO	Floating status message contact, normally open connection
KL3	1	OUT	Analog output, 0-10 VDC, max. 3 mA, SELV, output of the current level control coefficient: 1 V equates to 10 % level control coefficient. 10 V equate to 100 % level control coefficient.
KL3	2, 8	GND	Reference mass for control interface, SELV
KL3	3, 7	0-10 V	Use control / actual value input 0-10 VDC, impedance 100 kΩ only as alternative to 4-20 mA input, SELV
KL3	4	+10 V	Voltage output 10 VDC (+/-3 %), max. 10 mA, supply voltage for ext. devices (e.g. potentiometers), SELV
KL3	5	+20 V	Voltage output 20 VDC (+25 %/-10 %), max. 50 mA, supply voltage for ext. devices (e.g. sensors), SELV
KL3	6	4-20 mA	Use control / actual value input 4-20 mA, impedance 100 Ω, only as alternative to 0-10 V input, SELV
KL3	9, 11	RSB	RS485 interface for ebmBus, RSB, SELV
KL3	10, 12	RSA	RS485 interface for ebmBus, RSA, SELV

ebm-papst Mulfingen GmbH & Co. KG · Bachmühle 2 · D-74673 Mulfingen · Phone +49 (0) 7938 81-0 · Fax +49 (0) 7938 81-110 · info1@de.ebmpapst.com · www.ebmpapst.com

EC axial fan

sickled blades (S series)

Charts: Air flow 50 Hz

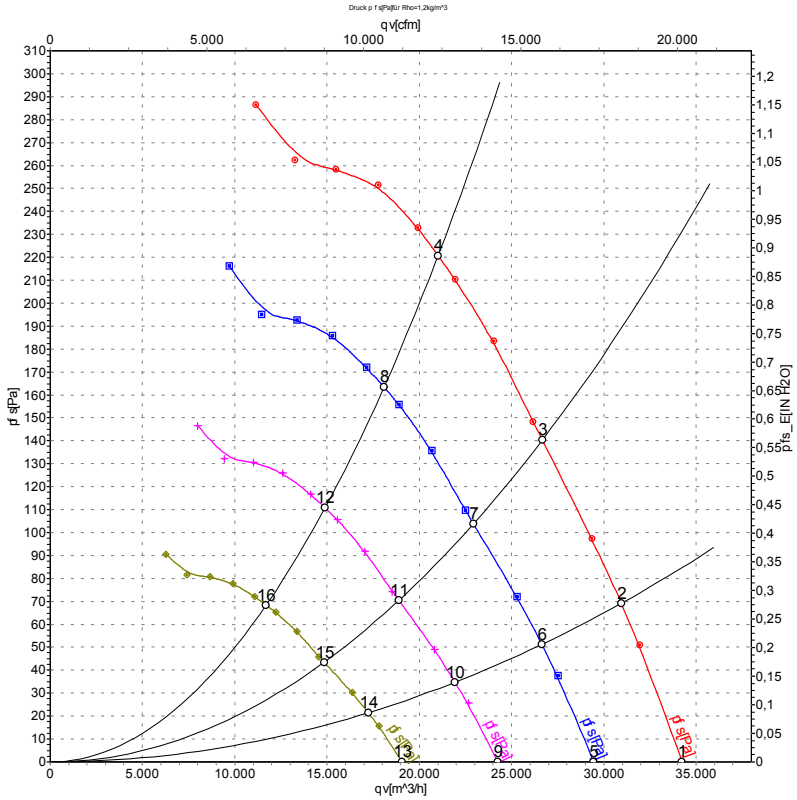

Measurement: LU-110953

Air performance measured as per ISO 5801 Installation category A. For detailed information on the measuring set-up, please contact ebm-papst. Suction-side noise levels: LwA measured as per ISO 13347 / LpA measured with 1m distance to fan axis. The values given are valid under the measuring conditions mentioned above and may vary according to the actual installation situation. With any deviation from the standard set-up, the specific values have to be checked and reviewed with the unit installed.

Measured values

	U	f	n	P_{ed}	I	LpA_{in}	LwA_{in}	LwA_{out}	qv	p_{fs}
	V	Hz	min^{-1}	W	A	dB(A)	dB(A)	dB(A)	m^3/h	Pa
1	400	50	980	1898	2.91	73	80	78	34240	0
2	400	50	980	2178	3.30	72	79	77	30950	70
3	400	50	980	2472	3.75	72	78	77	26670	140
4	400	50	980	2800	4.30	75	82	81	21020	220
5	400	50	850	1208	1.85	69	76	75	29450	0
6	400	50	850	1390	2.11	68	75	73	26650	51
7	400	50	850	1573	2.39	68	75	73	22940	104
8	400	50	850	1783	2.72	72	79	78	18090	163
9	400	50	700	675	1.03	65	72	71	24260	0
10	400	50	700	776	1.18	64	71	69	21940	35
11	400	50	700	879	1.33	64	71	69	18890	70
12	400	50	700	996	1.52	68	75	73	14900	111
13	400	50	550	327	0.50	60	67	66	19060	0
14	400	50	550	376	0.57	59	66	64	17240	22
15	400	50	550	426	0.65	59	66	64	14840	43
16	400	50	550	483	0.74	63	69	68	11700	68

U = Supply voltage · f = Frequency · n = Speed · P_{ed} = Power input · I = Current draw · LpA_{in} = Sound pressure level inlet side · LwA_{in} = Sound power level inlet side · LwA_{out} = Sound power level outlet side
qv = Air flow · p_{fs} = Pressure increase

ebm-papst Mulfingen GmbH & Co. KG · Bachmühle 2 · D-74673 Mulfingen · Phone +49 (0) 7938 81-0 · Fax +49 (0) 7938 81-110 · info1@de.ebmpapst.com · www.ebmpapst.com