A4D500-AM03-01

AC axial fan - HyBlade

sickled blades (S series)



ebm-papst Mulfingen GmbH & Co. KG
Bachmühle 2 · D-74673 Mulfingen
Phone +49 7938 81-0
Fax +49 7938 81-110
info1@de.ebmpapst.com
www.ebmpapst.com

Limited partnership · Headquarters Mulfingen
County court Stuttgart · HRA 590344

General partner Elektrobau Mulfingen GmbH · Headquarters Mulfingen
County court Stuttgart · HRB 590142

ErP2015 EXCEEDS THE NORM

Nominal data

Type	**A4D500-AM03-01**
Motor	**M4D110-GF**

Phase		3~	3~	3~	3~
Nominal voltage	VAC	400	400	400	460
Connection		Δ	Y	Δ	Δ
Frequency	Hz	50	50	60	60
Type of data definition		ml	ml	ml	ml
Valid for approval / standard		CE	CE	CE	CE
Speed	min^{-1}	1390	1180	1590	1640
Power input	W	720	550	1020	1060
Current draw	A	1.41	0.9	1.7	1.64
Max. back pressure	Pa	140	100	130	138
Min. ambient temperature	°C	-40	-40	-40	-40
Max. ambient temperature	°C	65	65	50	60
Starting current	A	6.5	2.2	5.9	6.8

ml = Max. load · me = Max. efficiency · fa = Running at free air · cs = Customer specs · cu = Customer unit
Subject to alterations

Data according to ErP directive

		Actual	Request 2015
01 Overall efficiency η_{es}	%	33.4	32.8
02 Measurement category		A	
03 Efficiency category		Static	
04 Efficiency grade N		40.6	40
05 Variable speed drive		No	

09 Power input P_e	kW	0.73
09 Air flow q_v	m^3/h	5860
09 Pressure increase p_{fs}	Pa	151
10 Speed n	min^{-1}	1385
11 Specific ratio*		1.00

Data definition with optimum efficiency.
The ErP data is determined using a motor-impeller combination in a standardised measurement configuration.

* Specific ratio = 1 + p_{fs} / 100 000 Pa

LU-106631

ebmpapst

AC axial fan - HyBlade

sickled blades (S series)

Technical features

Mass	9.8 kg
Size	500 mm
Surface of rotor	Coated in black
Material of terminal box	PP plastic
Material of blades	Press-fitted sheet steel blank, sprayed with PP plastic
Number of blades	5
Direction of air flow	"V"
Direction of rotation	Counter-clockwise, seen on rotor
Type of protection	IP 54
Insulation class	"F"
Humidity class	F4-1
Max. permissible ambient motor temp. (transp./ storage)	+ 80 °C
Min. permissible ambient motor temp. (transp./storage)	- 40 °C
Mounting position	Shaft horizontal or rotor on bottom; rotor on top on request
Condensate discharge holes	Rotor-side
Operation mode	S1
Motor bearing	Ball bearing
Touch current acc. IEC 60990 (measuring network Fig. 4, TN system)	<= 3.5 mA
Electrical leads	Via terminal box
Motor protection	Thermal overload protector (TOP) brought out
Cable exit	Axial
Protection class	I (if protective earth is connected by customer)
Product conforming to standard	EN 61800-5-1; CE
Approval	EAC; VDE; CCC

ebm-papst Mulfingen GmbH & Co. KG · Bachmühle 2 · D-74673 Mulfingen · Phone +49 (0) 7938 81-0 · Fax +49 (0) 7938 81-110 · info1@de.ebmpapst.com · www.ebmpapst.com

AC axial fan - HyBlade

sickled blades (S series)

Product drawing

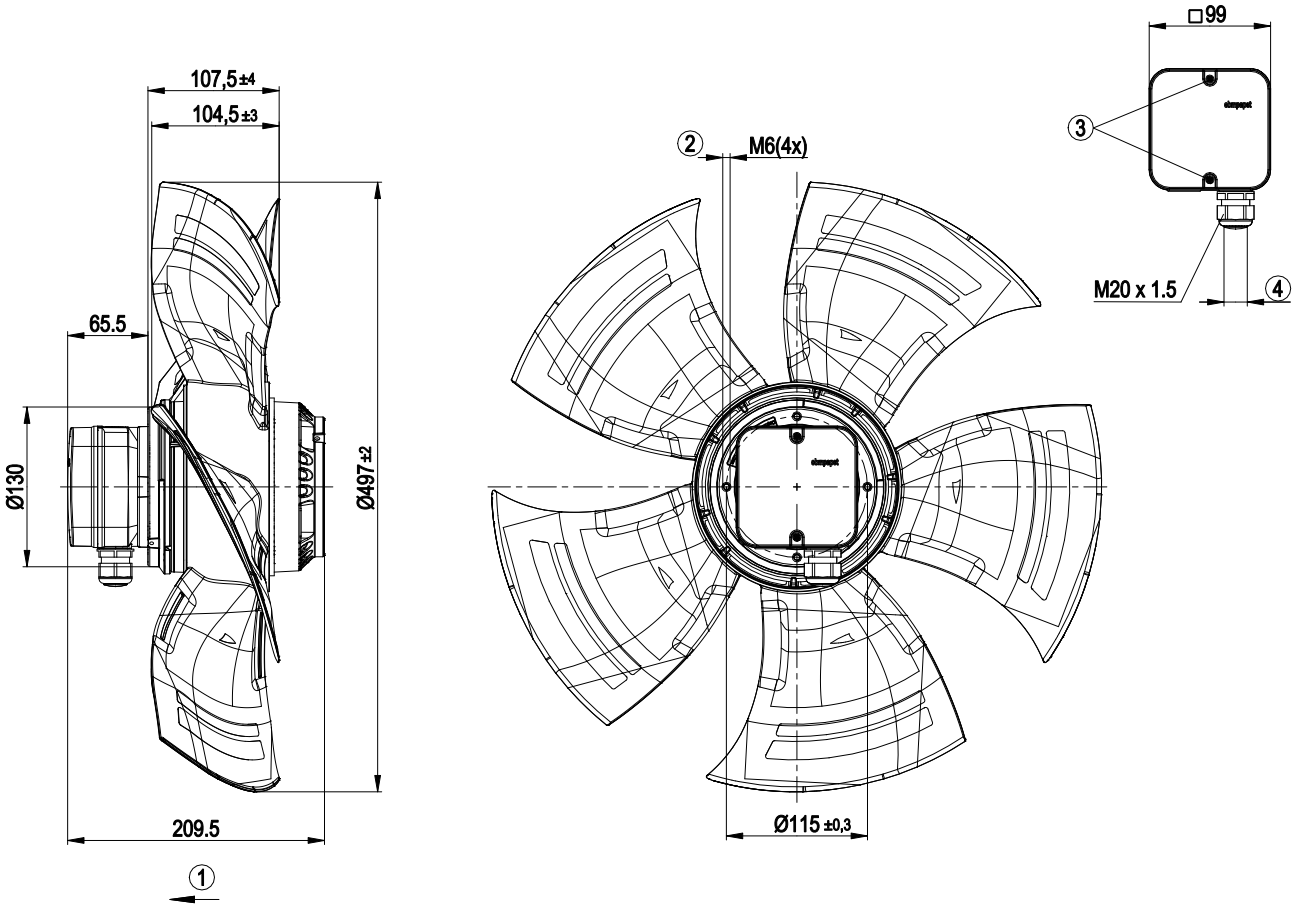

1	Direction of air flow "V"
2	Depth of screw max. 12 mm
3	Tightening torque 1.5±0.2 Nm
4	Cable diameter: min. 6 mm, max. 12 mm; tightening torque: 2±0.3 Nm

ebm-papst Mulfingen GmbH & Co. KG · Bachmühle 2 · D-74673 Mulfingen · Phone +49 (0) 7938 81-0 · Fax +49 (0) 7938 81-110 · info1@de.ebmpapst.com · www.ebmpapst.com

AC axial fan - HyBlade

sickled blades (S series)

Connection screen

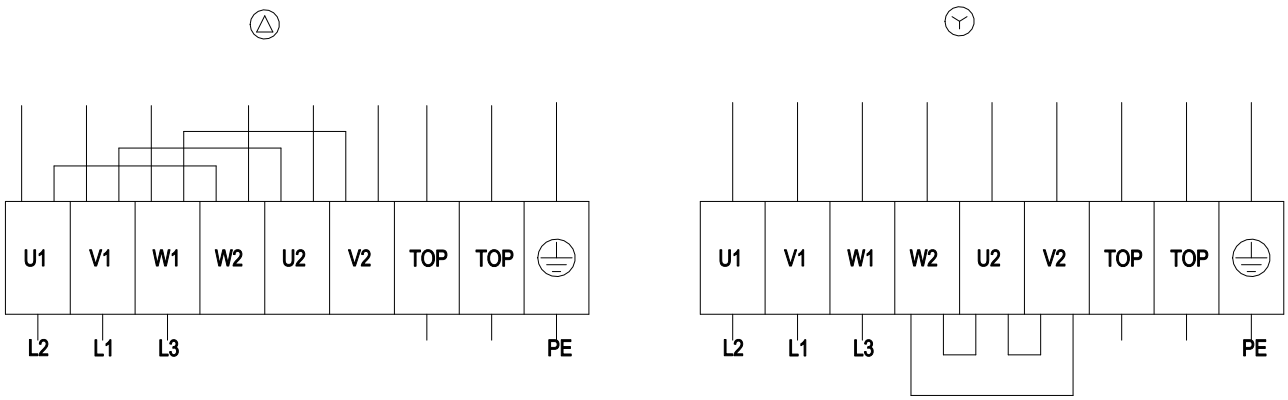

Δ	Delta connection	Y	Star connection	L1	= V1 = blue
L2	= U1 = black	L3	= W1 = brown	W2	yellow
U2	green	V2	white	TOP	2 x grey
PE	green/yellow				

ebm-papst Mulfingen GmbH & Co. KG · Bachmühle 2 · D-74673 Mulfingen · Phone +49 (0) 7938 81-0 · Fax +49 (0) 7938 81-110 · info1@de.ebmpapst.com · www.ebmpapst.com

AC axial fan - HyBlade

sickled blades (S series)

Charts: Air flow 50 Hz

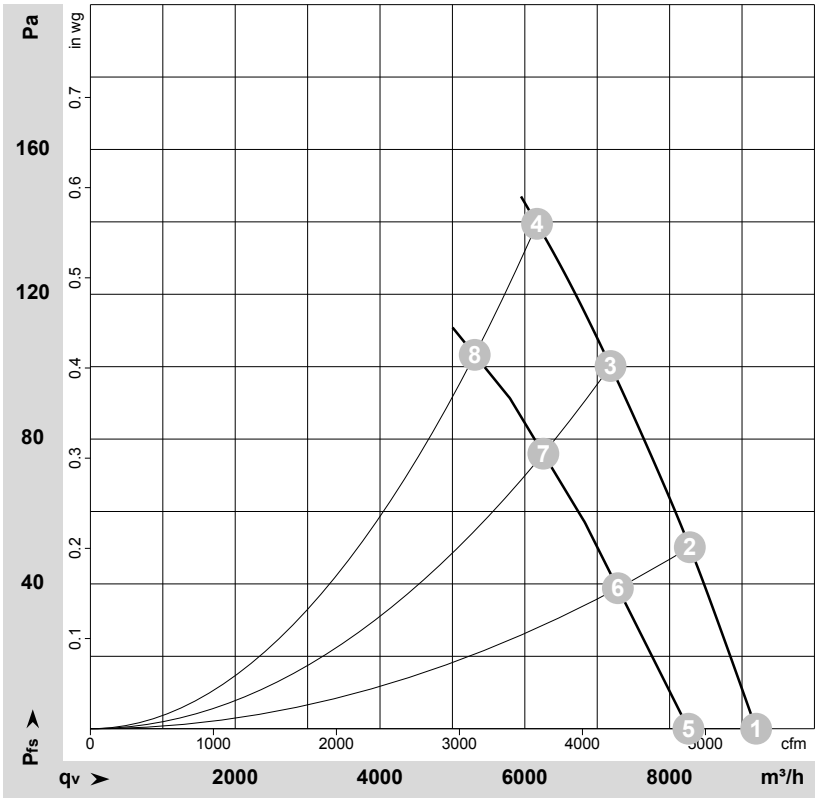

ρ = 1,15 kg/m³ ± 2%

Measurement: LU-106631
Measurement: LU-106885

Air performance measured as per ISO 5801 Installation category A. For detailed information on the measuring set-up, please contact ebm-papst. Suction-side noise levels: LwA measured as per ISO 13347 / LpA measured with 1m distance to fan axis. The values given are valid under the measuring conditions mentioned above and may vary according to the actual installation situation. With any deviation from the standard set-up, the specific values have to be checked and reviewed with the unit installed.

Measured values

	Conn.	U	f	n	P_e	I	LpA_{in}	LwA_{in}	LwA_{out}	qv	p_{fs}
		V	Hz	min^{-1}	W	A	dB(A)	dB(A)	dB(A)	m^3/h	Pa
1	Δ	400	50	1420	540	1.20	68	75	75	9195	0
2	Δ	400	50	1410	605	1.28	65	72	72	8280	50
3	Δ	400	50	1400	663	1.35	64	71	71	7185	100
4	Δ	400	50	1390	720	1.41	64	72	72	6170	140
5	Y	400	50	1275	433	0.71		72	73	8260	0
6	Y	400	50	1240	478	0.78		70	70	7285	39
7	Y	400	50	1215	518	0.85		68	68	6255	76
8	Y	400	50	1180	550	0.90		68	68	5310	103

Conn. = Connection · U = Supply voltage · f = Frequency · n = Speed · P_e = Power input · I = Current draw · LpA_{in} = Sound pressure level inlet side · LwA_{in} = Sound power level inlet side
LwA_{out} = Sound power level outlet side · qv = Air flow · p_{fs} = Pressure increase

ebm-papst Mulfingen GmbH & Co. KG · Bachmühle 2 · D-74673 Mulfingen · Phone +49 (0) 7938 81-0 · Fax +49 (0) 7938 81-110 · info1@de.ebmpapst.com · www.ebmpapst.com

AC axial fan - HyBlade

sickled blades (S series)

Charts: Air flow 60 Hz

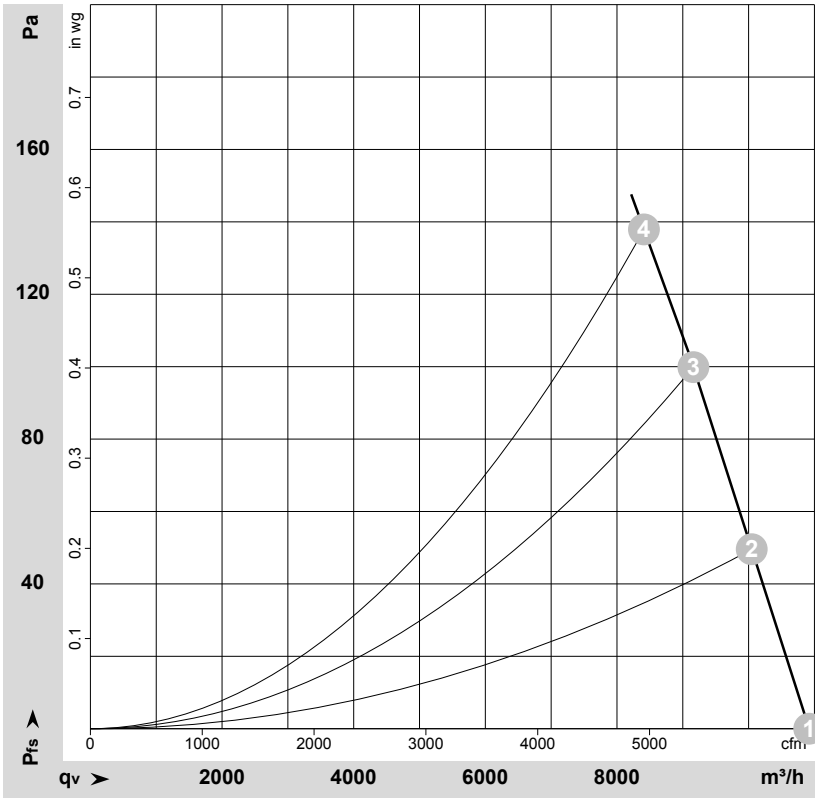

ρ = 1,15 kg/m³ ± 2%

Measurement: LU-110160

Air performance measured as per ISO 5801 Installation category A. For detailed information on the measuring set-up, please contact ebm-papst. Suction-side noise levels: LwA measured as per ISO 13347 / LpA measured with 1m distance to fan axis. The values given are valid under the measuring conditions mentioned above and may vary according to the actual installation situation. With any deviation from the standard set-up, the specific values have to be checked and reviewed with the unit installed.

Measured values

	Conn.	U	f	n	P_e	I	LpA_{in}	LwA_{in}	LwA_{out}	qv	p_{fs}
		V	Hz	min^{-1}	W	A	dB(A)	dB(A)	dB(A)	m^3/h	Pa
1	Δ	460	60	1680	854	1.41	71	79	79	10920	0
2	Δ	460	60	1670	930	1.49	70	77	77	10045	50
3	Δ	460	60	1655	1008	1.58	68	75	75	9160	100
4	Δ	460	60	1640	1060	1.64	68	75	75	8410	138

Conn. = Connection · U = Supply voltage · f = Frequency · n = Speed · P_e = Power input · I = Current draw · LpA_{in} = Sound pressure level inlet side · LwA_{in} = Sound power level inlet side
LwA_{out} = Sound power level outlet side · qv = Air flow · p_{fs} = Pressure increase

ebm-papst Mulfingen GmbH & Co. KG · Bachmühle 2 · D-74673 Mulfingen · Phone +49 (0) 7938 81-0 · Fax +49 (0) 7938 81-110 · info1@de.ebmpapst.com · www.ebmpapst.com