A4E500-AY09-01

AC axial fan

sickled blades (S series)



ebm-papst Mulfingen GmbH & Co. KG
Bachmühle 2 · D-74673 Mulfingen
Phone +49 7938 81-0
Fax +49 7938 81-110
info1@de.ebmpapst.com
www.ebmpapst.com

Limited partnership · Headquarters Mulfingen
County court Stuttgart · HRA 590344

General partner Elektrobau Mulfingen GmbH · Headquarters Mulfingen
County court Stuttgart · HRB 590142

Nominal data

Type	**A4E500-AY09-01**
Motor	**M4E094-HA**

Phase		1~
Nominal voltage	VAC	230
Frequency	Hz	50
Type of data definition		ml
Valid for approval / standard		-
Speed	min^{-1}	1270
Power input	W	635
Current draw	A	3.1
Motor capacitor	µF	10
Capacitor voltage	VDB	400
Capacitor standard		P0 (CE)
Max. back pressure	Pa	120
Min. ambient temperature	°C	-40
Max. ambient temperature	°C	60
Starting current	A	5.9

ml = Max. load · me = Max. efficiency · fa = Running at free air · cs = Customer specs · cu = Customer unit
Subject to alterations

AC axial fan

sickled blades (S series)

Technical features

Mass	8.1 kg
Size	500 mm
Surface of rotor	Coated in black
Material of terminal box	ABS plastic
Material of blades	Aluminum sheet
Number of blades	5
Blade angle	- 5
Direction of air flow	"V"
Direction of rotation	Counter-clockwise, seen on rotor
Type of protection	IP 54
Insulation class	"F"
Humidity class	F3-1
Max. permissible ambient motor temp. (transp./ storage)	+ 80 °C
Min. permissible ambient motor temp. (transp./storage)	- 40 °C
Mounting position	Shaft horizontal or rotor on bottom; rotor on top on request
Condensate discharge holes	Rotor-side
Operation mode	S1
Motor bearing	Ball bearing
Touch current acc. IEC 60990 (measuring network Fig. 4, TN system)	<= 3.5 mA
Electrical leads	Via terminal box, integrated capacitor connected via terminal box
Motor protection	Thermal overload protector (TOP) brought out
Protection class	I (if protective earth is connected by customer)
Product conforming to standard	EN 60034-1 (2010)

ebm-papst Mulfingen GmbH & Co. KG · Bachmühle 2 · D-74673 Mulfingen · Phone +49 (0) 7938 81-0 · Fax +49 (0) 7938 81-110 · info1@de.ebmpapst.com · www.ebmpapst.com

AC axial fan

sickled blades (S series)

Product drawing

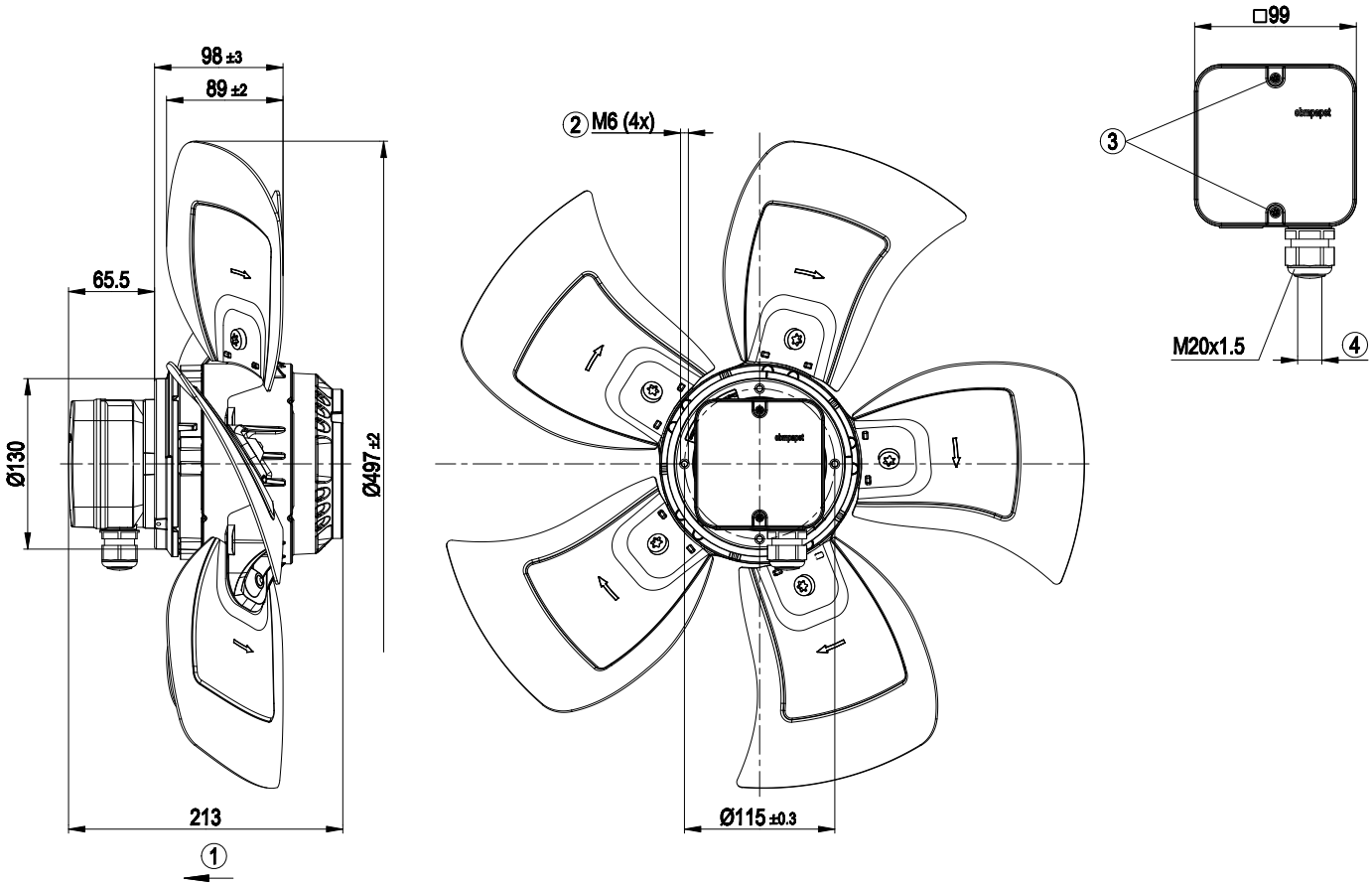

1	Direction of air flow "V"
2	Thread reach max. 12 mm
3	Tightening torque 0.8±0.15 Nm
4	Cable diameter min. 6 mm, max. 12 mm, tightening torque 2.0±0.3 Nm

ebm-papst Mulfingen GmbH & Co. KG · Bachmühle 2 · D-74673 Mulfingen · Phone +49 (0) 7938 81-0 · Fax +49 (0) 7938 81-110 · info1@de.ebmpapst.com · www.ebmpapst.com

AC axial fan

sickled blades (S series)

Connection screen

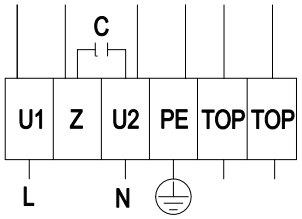

L	= U1 = blue	Z	brown	N	= U2 = black
PE	green / yellow	TOP	grey		

ebm-papst Mulfingen GmbH & Co. KG · Bachmühle 2 · D-74673 Mulfingen · Phone +49 (0) 7938 81-0 · Fax +49 (0) 7938 81-110 · info1@de.ebmpapst.com · www.ebmpapst.com

AC axial fan

sickled blades (S series)

Charts: Air flow 50 Hz

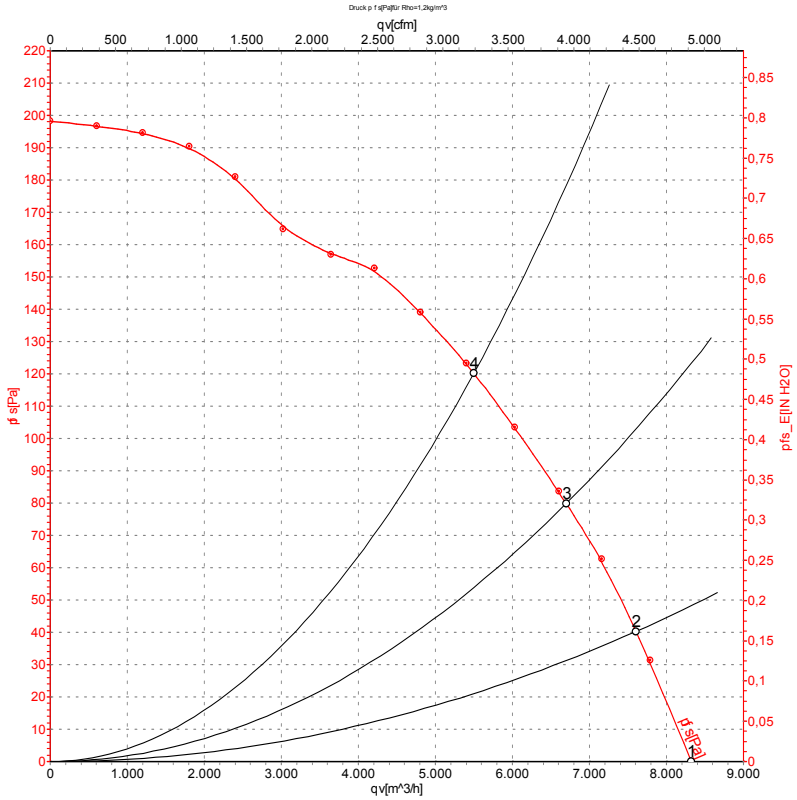

Measurement: LU-70131

Air performance measured as per ISO 5801 Installation category A. For detailed information on the measuring set-up, please contact ebm-papst. Suction-side noise levels: LwA measured as per ISO 13347 / LpA measured with 1m distance to fan axis. The values given are valid under the measuring conditions mentioned above and may vary according to the actual installation situation. With any deviation from the standard set-up, the specific values have to be checked and reviewed with the unit installed.

Measured values

	U	f	n	P_e	I	qv	p_{fs}
	V	Hz	min^{-1}	W	A	m^3/h	Pa
1	230	50	1345	510	2.53	8320	0
2	230	50	1320	554	2.73	7605	40
3	230	50	1300	594	2.91	6700	80
4	230	50	1270	635	3.10	5500	120

U = Supply voltage · f = Frequency · n = Speed · P_e = Power input · I = Current draw · qv = Air flow · p_{fs} = Pressure increase

ebm-papst Mulfingen GmbH & Co. KG · Bachmühle 2 · D-74673 Mulfingen · Phone +49 (0) 7938 81-0 · Fax +49 (0) 7938 81-110 · info1@de.ebmpapst.com · www.ebmpapst.com