D2E133-DM27-D8

AC centrifugal fan

forward curved, dual inlet

with housing (flange)

ebm-papst Mulfingen GmbH & Co. KG
Bachmühle 2 · D-74673 Mulfingen
Phone +49 7938 81-0
Fax +49 7938 81-110
info1@de.ebmpapst.com
www.ebmpapst.com

Limited partnership · Headquarters Mulfingen
County court Stuttgart · HRA 590344

General partner Elektrobau Mulfingen GmbH · Headquarters Mulfingen
County court Stuttgart · HRB 590142

ErP2013 EXCEEDS THE NORM

Nominal data

Type	**D2E133-DM27-D8**
Motor	**M2E068-DF**

Phase		1~	1~	1~
Nominal voltage	VAC	230	230	230
Frequency	Hz	50	60	60
Type of data definition		ml	ml	ml
Valid for approval / standard		CE	CE	UL
Speed	min^{-1}	1700	1900	1900
Power input	W	200	220	240
Current draw	A	0.88	0.97	1.06
Motor capacitor	µF	5	5	5
Capacitor voltage	VDB	400	400	400
Min. back pressure	Pa	100	150	150
Min. ambient temperature	°C	-25	-25	-25
Max. ambient temperature	°C	30	30	30

ml = Max. load · me = Max. efficiency · fa = Running at free air · cs = Customer specs · cu = Customer unit
Subject to alterations

Data according to ErP directive

Installation category	A
Efficiency category	Static
Variable speed drive	No
Specific ratio*	1.00

* Specific ratio = 1 + p_{fs} / 100 000 Pa

		Actual	Request 2013	Request 2015
Overall efficiency η_{es}		27.1	25.5	32.5
Efficiency grade N		38.6	37	44
Power input P_e	kW	0.15		
Air flow q_v	m^3/h	500		
Pressure increase p_{fs}	Pa	300		
Speed n	min^{-1}	2425		

Data definition with optimum efficiency.
The ErP data is determined using a motor-impeller combination in a standardised measurement configuration.

AC centrifugal fan

forward curved, dual inlet

with housing (flange)

Technical features

Mass	4.04 kg
Size	133 mm
Material of impeller	Sheet steel, hot-galvanised
Housing material	Sheet steel, hot-galvanised
Material of support structure	Sheet steel, hot-galvanised
Direction of rotation	Clockwise, seen on rotor
Type of protection	IP 44; Depending on installation and position
Insulation class	"B"
Humidity class	F0
Max. permissible ambient motor temp. (transp./ storage)	+ 80 °C
Min. permissible ambient motor temp. (transp./storage)	- 40 °C
Mounting position	Any
Condensate discharge holes	None
Operation mode	S1
Motor bearing	Ball bearing
Touch current acc. IEC 60990 (measuring network Fig. 4, TN system)	< 0.75 mA
Electrical leads	Via terminal strips, integrated capacitor connected via terminal strips
Motor protection	Thermal overload protector (TOP) wired internally
Cable exit	Axial
Protection class	I (if protective earth is connected by customer)
Product conforming to standard	EN 60335-1; CE

ebm-papst Mulfingen GmbH & Co. KG · Bachmühle 2 · D-74673 Mulfingen · Phone +49 (0) 7938 81-0 · Fax +49 (0) 7938 81-110 · info1@de.ebmpapst.com · www.ebmpapst.com

AC centrifugal fan

forward curved, dual inlet

with housing (flange)

Product drawing

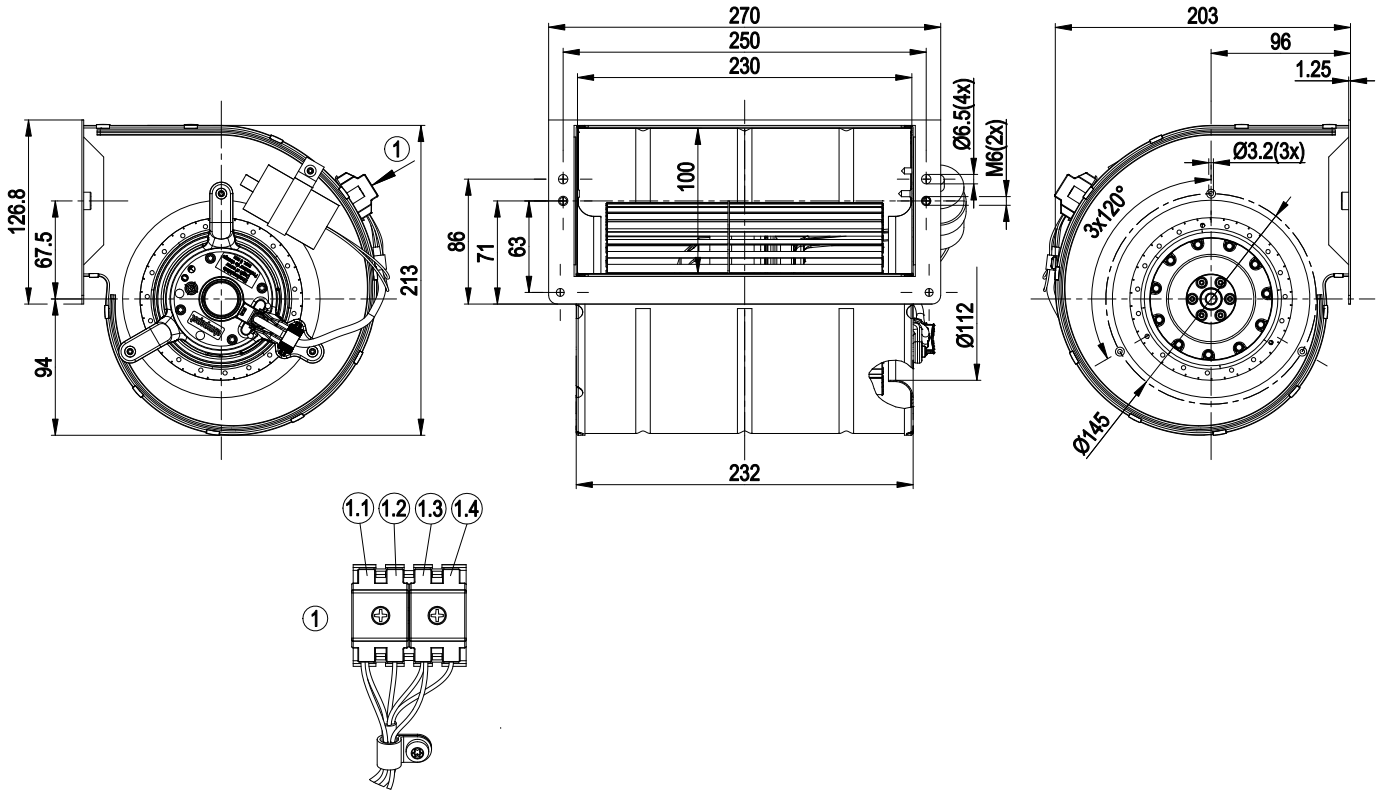

1	Connection line PVC 4G 0.5mm², with terminal strip WECO 323-V-HDS/04-V0-BNA
1.1	brown + capacitor
1.2	Blue
1.3	black + capacitor
1.4	green/yellow

Connection screen

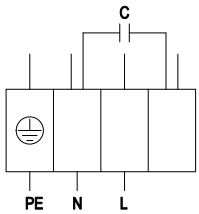

PE	green / yellow	N	black	L	blue

ebm-papst Mulfingen GmbH & Co. KG · Bachmühle 2 · D-74673 Mulfingen · Phone +49 (0) 7938 81-0 · Fax +49 (0) 7938 81-110 · info1@de.ebmpapst.com · www.ebmpapst.com

AC centrifugal fan

forward curved, dual inlet

with housing (flange)

Charts: Air flow 50 Hz

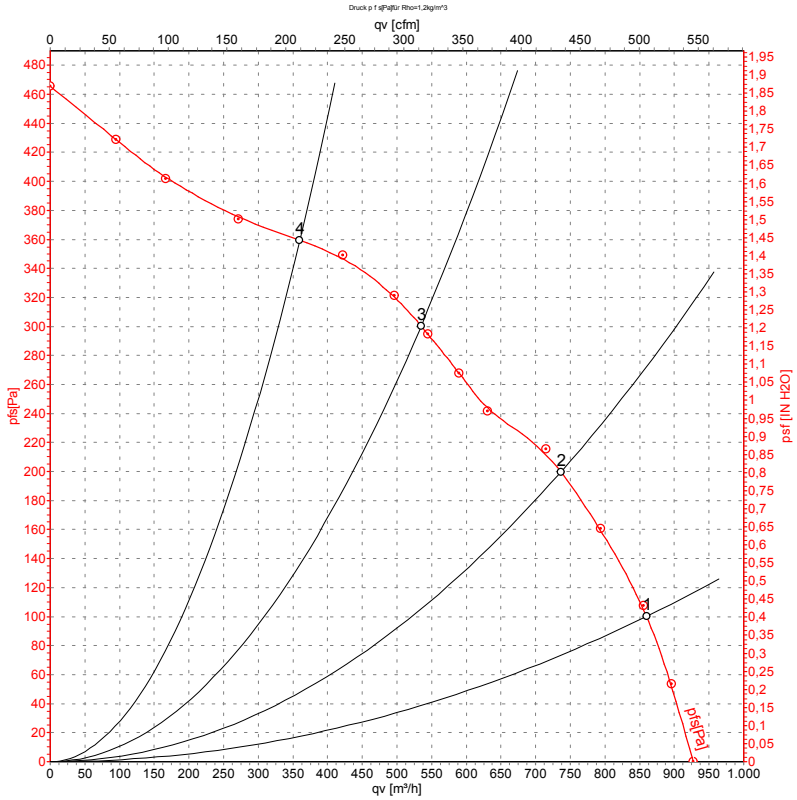

Measurement: LU-57049

Air performance measured as per ISO 5801 Installation category A. For detailed information on the measuring set-up, please contact ebm-papst. Suction-side noise levels: LwA measured as per ISO 13347 / LpA measured with 1m distance to fan axis. The values given are valid under the measuring conditions mentioned above and may vary according to the actual installation situation. With any deviation from the standard set-up, the specific values have to be checked and reviewed with the unit installed.

Measured values

	U	f	n	P_e	I	qv	p_{fs}
	V	Hz	min^{-1}	W	A	m^3/h	Pa
1	230	50	1700	200	0.88	860	100
2	230	50	2035	181	0.79	735	200
3	230	50	2370	157	0.69	535	300
4	230	50	2540	139	0.62	360	360

U = Supply voltage · f = Frequency · n = Speed · P_e = Power input · I = Current draw · qv = Air flow · p_{fs} = Pressure increase

ebm-papst Mulfingen GmbH & Co. KG · Bachmühle 2 · D-74673 Mulfingen · Phone +49 (0) 7938 81-0 · Fax +49 (0) 7938 81-110 · info1@de.ebmpapst.com · www.ebmpapst.com

AC centrifugal fan

forward curved, dual inlet

with housing (flange)

Charts: Air flow 60 Hz

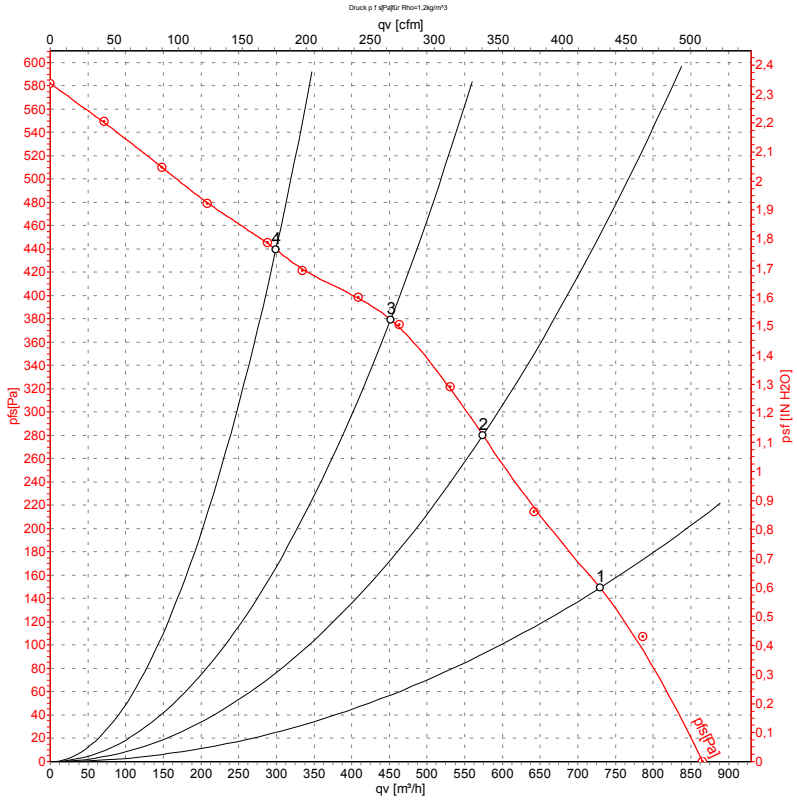

Measurement: LU-57050

Air performance measured as per ISO 5801 Installation category A. For detailed information on the measuring set-up, please contact ebm-papst. Suction-side noise levels: LwA measured as per ISO 13347 / LpA measured with 1m distance to fan axis. The values given are valid under the measuring conditions mentioned above and may vary according to the actual installation situation. With any deviation from the standard set-up, the specific values have to be checked and reviewed with the unit installed.

Measured values

	U	f	n	P_e	I	qv	p_{fs}
	V	Hz	min^{-1}	W	A	m^3/h	Pa
1	230	60	1900	220	0.97	730	150
2	230	60	2330	209	0.92	575	280
3	230	60	2610	200	0.89	450	380
4	230	60	2825	191	0.86	300	440

U = Supply voltage · f = Frequency · n = Speed · P_e = Power input · I = Current draw · qv = Air flow · p_{fs} = Pressure increase

ebm-papst Mulfingen GmbH & Co. KG · Bachmühle 2 · D-74673 Mulfingen · Phone +49 (0) 7938 81-0 · Fax +49 (0) 7938 81-110 · info1@de.ebmpapst.com · www.ebmpapst.com